DEPARTMENT OF THE NAVY
Naval Sea Systems Command
1333 ISAAC HULL AVE, SE
WASHINGTON NAVY YARD, DC 20376

8020
IN REPLY REFER TO
Ser N5/1177
24 Jul 09

From: Commander, Naval Sea Systems Command

Subj: NAVSEA SW020-AF-HBK-010, SIXTH REVISION,"MOTOR VEHICLE DRIVER AND SHIPPING INSPECTOR'S HANDBOOK FOR AMMUNITION, EXPLOSIVES AND RELATED HAZARDOUS MATERIALS"

Ref: (a) NAVSEA SW020-AF-HBK-010, Fifth Revision of 1 July 2007

Encl: (1) Abstract of Significant Changes

1. NAVSEA SW020-AF-HBK-010, Sixth Revision, is officially issued and supersedes reference (a), which should be destroyed.

2. NAVSEA SW020-AF-HBK-010, Sixth Revision, provides updated regulatory instructions and administrative changes. Enclosure (1) highlights significant changes that have been incorporated into the basic text of this new revision.

3. The subject manual will continue to be available only in CDROM format with a "glove-box edition" icon for easy printing of the chapters to be placed in each vehicle used for transporting arms, ammunition, explosives and related hazardous materials (AA&E).

4. The requirements contained in NAVSEA SW020-AF-HBK-010 are continuously monitored and evaluated to ensure compliance with current Department of Transportation and Defense Department regulations. Users are encouraged to submit any recommendations for improving this manual by submitting a Technical Manual Deficiency/Evaluation Report (TMDER). Changes to this manual will be issued as required.

5. The Naval Ordnance Safety and Security Activity point of contact is Mario Harley (N55), DSN 354-6066, commercial (301) 744-6066, or EMAIL mario.harley@navy.mil.

Laura M. DeSimone

LAURA M. DESIMONE
By direction

Distribution:
Explosives Safety Technical Manuals CDROM Distribution List

This page left intentionally blank

ABSTRACT OF SIGNIFICANT CHANGES

a. The word “manual” has been replaced with the word “handbook” in the title of this publication in order to align with the publication number definitions assigned by the Technical Data Management Information System (TDMIS).

b. Throughout the manual, regulations and guidelines specific to the shipment of arms, ammunition, explosives and related hazardous materials (AA&E) by rail have been removed and are now found in NAVSEA SW023-AK-SAF-010, “Movement and Inspection of Ammunition, Explosives and Related Hazardous Materials by Rail”. Terminology relating to AA&E vs. ammunition, explosives and related hazardous materials (A&E), i.e. hazard/class items, etc., has also been addressed throughout.

c. Beginning in Chapter 2 and throughout the manual, all references to security risk categories/codes (CAT/SRC) have been changed to read Security Risk Category (SRC). This coordinates with upcoming changes to DTR 4500.9-R and pending update to DOD 5100.76M.

d. Paragraphs 2-2(d) and (e) have been revised for clarity regarding explosives driver qualifications and necessary endorsements to the OF-346.

e. Paragraph 2-2.1 has been edited to differentiate requirements for contractor use of the OF-346 when contract personnel are employing only contractor-owned vehicles to move AA&E.

f. Paragraph 2-3.1.1 through 2-3.1.3 have been edited to clarify training requirements as applicable to shipping inspectors, explosives drivers and instructors of the 12-hour explosives driver course.

g. Paragraph 2-7.4 introduces information on limited quantities of small arms ammunition and Safety of Life at Sea (SOLAS) materials, in order to coordinate with NAVSEA OP 5 Volume 1 and NAVSEA SW020-AG-SAF-010.

h. Paragraph 3-1 provides guidance on the retention of shipping papers by both shippers and carriers.

i. Figure 3-1, OF-346, has been updated to show proper completion of the form, including samples of how vehicle types and capacity should be presented.

j. Figure 3-4, DD Form 626, has been replaced with the updated form dated March 2007.

k. Paragraph 3-4.2 has been edited to reiterate more clearly the requirement that two signatures be present on a DD Form 1907 before a shipment of AA&E is released.

l. Figure 3-14, DD Form 836, has been replaced with the updated form dated December 2007.

m. Figure 3-18, SF 91, has been replaced with the updated form dated February 2004.

n. Figure 3-19, SF 361, has been replaced with the new form DD Form 361.

o. Paragraph 4-2.4.3 has been added to address the approved use of Medium Tactical Vehicle Replacement (MVTR) trucks configured with TRICON containers for the transport of AA&E off-station.

p. Paragraph 4-3.1(f) has been revised to more clearly present cargo space requirements; paragraph 4-3.1(g) has been updated to include requirements for the proper installation of door hinges and hasps on trailers, straight trucks and/or dromedary boxes used to transport sensitive conventional AA&E.

q. Paragraph 4-8 introduces the regulations requiring that all AA&E shipments moving in MILVAN/ISO containers configured with a customs catch plate door design have a security seal applied to both the left and right door. Figure 4-4 is a new illustration presented for further clarification.

r. Paragraph 5-2.3.1 addresses the permissible operating distance (POD) established for the use of government owned vehicles to transport DOD freight.

s. Paragraph 6-6 has been updated to match the guidelines presented in NAVSEA OP 5 Volume 1 regarding empty container certification.

t. Chapter 7 has been deleted in its entirety (rail guidelines moved to NAVSEA SW023-AK-SAF-010).

u. Appendix A, item 9, has been edited to clarify inspection requirements pertaining to the Commercial Vehicle Safety Alliance (CVSA) decal.

v. Appendix A, item 12b, has been edited to remove information pertaining to vehicles that may be equipped with two horns; item 12d(3) has been edited to more clearly define guidelines for labels, stickers or decals on vehicles; item 12i has been updated to include guidelines on the requirement for retroreflective sheeting and reflex reflectors; item 12q(2) has been added to provide guidance on inspection of rear axles; item 12r has been updated with guidance on requirements for doors, door hinges, and locking hardware; item 12t requirement for inspection the condition of sleeper cabs has been removed, and clarification for ensuring that a speedometer is functional is provided.

w. Appendix B, Criteria for Inspection of Railcars, has been removed in its entirety and incorporated into NAVSEA SW023-AK-SAF-010.

x. Appendix C, Instructions for Completion of the SF 91, has been updated to align with the February 2004 version of the form.

y. Appendix D, Title 49 CFR Part 397, has been updated to align with 1 October 2008 version.

z. General editorial corrections throughout the manual.

This page left intentionally blank

0640-LP-108-5743 SIXTH REVISION

MOTOR VEHICLE DRIVER AND SHIPPING INSPECTOR'S HANDBOOK FOR AMMUNITION, EXPLOSIVES AND RELATED HAZARDOUS MATERIALS

Click the button below to view the ACN on this publication.

ACN 1/10

DISTRIBUTION STATEMENT C
Distribution authorized to U.S. Government agencies and their contractors; administrative/operational use; 1 July 2009. Other requests for this document must be referred to the Naval Ordnance Safety and Security Activity (NOSSA) (N5).

DESTRUCTION NOTICE
Destroy by any method that will prevent disclosure of contents or reconstruction of the document.

THIS PUBLICATION SUPERSEDES NAVSEA SW020-AF-HBK-010, FIFTH REVISION, DATED 1 JULY 2007

PUBLISHED BY DIRECTION OF COMMANDER, NAVAL SEA SYSTEMS COMMAND

This page left intentionally blank

0640-LP-108-5743 SIXTH REVISION

MOTOR VEHICLE DRIVER AND SHIPPING INSPECTOR'S HANDBOOK FOR AMMUNITION, EXPLOSIVES AND RELATED HAZARDOUS MATERIALS

DISTRIBUTION STATEMENT C
Distribution authorized to U.S. Government agencies and their contractors; administrative/operational use; 1 July 2009. Other requests for this document must be referred to the Naval Ordnance Safety and Security Activity (NOSSA) (N5).

DESTRUCTION NOTICE
Destroy by any method that will prevent disclosure of contents or reconstruction of the document.

THIS PUBLICATION SUPERSEDES NAVSEA SW020-AF-HBK-010, FIFTH REVISION, DATED 1 JULY 2007

PUBLISHED BY DIRECTION OF COMMANDER, NAVAL SEA SYSTEMS COMMAND

1 JULY 2009

Reproduction for nonmilitary use of the information or illustrations contained in this publication is not permitted. This does not preclude reproduction and use of any part of this manual by contracted agencies responsible for the training and instruction of personnel who handle and transport military ammunition, explosives, and related hazardous materials. The policy for military use reproduction is established for the Army in AR 380-5, for the Navy and Marine Corps in SECNAVINST 5510.36 (series), and for the Air Force in Air Force Regulations 205-1.

LIST OF EFFECTIVE PAGES

The total number of pages in this manual is 206. They are all original Revision Six pages. The date of issue for all pages in this manual is 1 July 2009. Change bars are included to assist the reader in identifying areas where changes to requirements/procedures have occurred.

NAVSEA TECHNICAL MANUAL CERTIFICATION SHEET

CERTIFICATION APPLIES TO: NEW MANUAL ____ REVISION 6 CHANGE ____

APPLICABLE TMINS/PUB NO.: NAVSEA SW020-AF-HBK-010

PUBLICATION DATE (MO, DA, YR): 1 JULY 2009

READING GRADE LEVEL (RGL):

TITLE: MOTOR VEHICLE DRIVER AND SHIPPING INSPECTOR'S HANDBOOK FOR AMMUNITION, EXPLOSIVES AND RELATED HAZARDOUS MATERIALS

TMCR/TMSR/SPECIFICATION NO.: TMSR 840668-000

CHANGES AND REVISIONS:

PURPOSE: TO SET FORTH EXISTING REGULATIONS FOR EXPLOSIVES DRIVERS AND SHIPPING INSPECTORS OF NAVY AND MARINE CORPS VEHICLES ENGAGED IN TRANSPORTING AMMUNITION, EXPLOSIVES AND RELATED HAZARDOUS MATERIALS.

EQUIPMENT ALTERATION NUMBERS INCORPORATED:

TMDER/ACN NUMBERS INCORPORATED: A00005-07-DC01

CONTINUE ON REVERSE SIDE OR ADD PAGES AS NEEDED

CERTIFICATION STATEMENT

THIS IS TO CERTIFY THAT RESPONSIBLE NAVSEA ACTIVITIES HAVE REVIEWED THE ABOVE IDENTIFIED DOCUMENT FOR ACQUISITION COMPLIANCE, TECHNICAL COVERAGE, AND PRINTING QUALITY. THIS FORM IS FOR INTERNAL NAVSEA MANAGEMENT USE ONLY, AND DOES NOT IMPLY CONTRACTUAL APPROVAL OR ACCEPTANCE OF THE TECHNICAL MANUAL BY THE GOVERNMENT, NOR RELIEVE THE CONTRACTOR OF ANY RESPONSIBILITY FOR DELIVERING THE TECHNICAL MANUAL IN ACCORDANCE WITH THE CONTRACT REQUIREMENT.

AUTHORITY	NAME	SIGNATURE	ORGANIZATION	CODE	DATE
ACQUISITION	K. H. ZIMMS	K. H. Z	PHST CENTER NAVAL SURFACE WARFARE CENTER INDIAN HEAD DIVISION DET EARLE COLTS NECK, NJ	E4	7/17/09
TECHNICAL	C. CHAPIN	C. Chapin	PHST CENTER NAVAL SURFACE WARFARE CENTER INDIAN HEAD DIVISION DET EARLE COLTS NECK, NJ	E421	7/15/09
PRINTING RELEASE	D. LAUER	D. Lauer	PHST CENTER NAVAL SURFACE WARFARE CENTER INDIAN HEAD DIVISION DET EARLE COLTS NECK, NJ	E421DL	7/13/09

This page left intentionally blank

FOREWORD

1. It is the policy of the Department of the Navy to maintain a strict and effective explosives transportation safety program. NAVSEA SW020-AF-HBK-010, Sixth Revision sets forth existing regulations for Navy and Marine Corps explosives drivers and shipping inspectors engaged in transporting arms, ammunition, explosives and related hazardous materials (AA&E) by military and commercial motor vehicles, and MILVAN containers.

NOTE

All regulations and guidelines specific to the shipment of AA&E by rail have been removed from this manual. This information is now found in NAVSEA SW023-AK-SAF-010, "Movement and Inspection of Ammunition, Explosives and Related Hazardous Materials by Rail".

This publication is intended for use by all Navy and Marine Corps military, civilian and contractor personnel holding positions as explosives drivers or shipping inspectors. Commanding Officers shall ensure that a copy of chapters 5 and 9, appendix C, and SF-91 (figure 3-18) is placed in each vehicle used for the transportation of AA&E within their command. These documents are found in an individual file on this CD-ROM entitled "Glove Box Edition of Driver's and Inspector's Manual."

2. This publication is not intended to supersede, contravene, or modify any federal, state, municipal or local laws, or any supplement thereto. If any provision of this publication appears to conflict with any other published regulation concerning the transportation of AA&E, the facts should be reported in detail to the Commanding Officer, Naval Ordnance Safety and Security Activity (NOSSA) (N5), Farragut Hall, 3817 Strauss Avenue, Suite 108, Indian Head, MD 20640-5151.

3. The Commandant of the Marine Corps has determined the provisions of this publication to be applicable to Marine Corps shippers; therefore, the contents apply to them and their contractors.

4. Changes to this publication will be issued as required. Comments or suggestions for improvements to this NAVSEA technical manual should be addressed as specified in paragraph 1-4.

5. Distribution related inquiries shall be addressed through the appropriate point of contact as listed on this CD-ROM.

6. This publication supersedes NAVSEA SW020-AF-HBK-010 Fifth Revision, dated 1 July 2007 which should be destroyed.

This page left intentionally blank

TABLE OF CONTENTS

Chapter/Paragraph		Page
List of Illustrations		**viii**
List of Tables		**x**
Safety Summary		**xi**
1	**INTRODUCTION**	**1-1**
1-1	Purpose of Manual.	1-1
1-2	Scope.	1-1
1-2.1	Mandatory and Advisory Regulations.	1-1
1-3	Organization of Manual.	1-2
1-3.1	Terms and Abbreviations.	1-2
1-3.2	Reference Documents.	1-2
1-4	Reporting Deficiencies in Manual.	1-2
1-5	Requests for Deviations.	1-2
1-6	Date of Publication.	1-2
2	**ADMINISTRATIVE REQUIREMENTS**	**2-1**
2-1	Introduction.	2-1
2-2	Qualifications for Explosives Drivers.	2-1
2-2.1	Department of Defense (DOD) Contract Personnel.	2-2
2-2.2	Medical Examinations.	2-3
2-2.3	Age and Experience.	2-3
2-2.4	Ability to Read and Understand Regulations.	2-3
2-3	Training Requirements.	2-3
2-3.1	Explosive Safety Training Program.	2-4
2-3.2	Maintaining Safety Skills.	2-5
2-4	Personal Responsibilities of Explosives Drivers and Shipping Inspectors.	2-6
2-4.1	Use of Protective Equipment.	2-6
2-4.2	Requesting Station Photographers.	2-6
2-5	Driver Liability.	2-6
2-6	Disciplinary Action and Penalties.	2-6
2-6.1	Reporting Traffic Violations or Accidents.	2-6
2-6.2	Suspension or Revocation of a Navy Driver's Permit.	2-7
2-6.3	Automatic Revocation of a Navy Driver's Permit.	2-7
2-6.4	Reinstatement.	2-7
2-7	Personnel Assignments.	2-7
2-7.1	Authorized Drivers.	2-7
2-7.2	Qualified Representatives.	2-8
2-7.3	Driver/Rider Criteria for Organic Movements On and Off-Station.	2-8
2-7.4	Limited Quantities of Small Arms Ammunition and Safety of Life At Sea (SOLAS) Materials.	2-9
2-7.5	Vehicle Communication Devices.	2-10
2-7.6	Instructions for Assistant Drivers During Flight-Line and Combat Aircraft Loading Area Ordnance Operations.	2-10

TABLE OF CONTENTS (Continued)

Chapter/Paragraph **Page**

2-8 Security. 2-11
2-8.1 Security Risk Category (SRC) 2-11
2-8.2 Minimum Transportation Security Standards and Force Protection Conditions (FPCON). 2-11
2-8.3 Classified Material. 2-12
2-9 In-Transit Security. 2-12
2-10 Department of Transportation Special Permits. 2-12
2-11 Packaging Certificates of Equivalency (COEs) 2-12
2-12 Competent Authority Approvals. 2-13

3 FORMS AND REPORTS 3-1
3-1 Introduction. 3-1
3-2 Driver's Personal Papers. 3-1
3-2.1 U.S. Government Motor Vehicle Operator's Identification Card, Optional Form 346. 3-1
3-2.2 Medical Examiner's Certificate. 3-1
3-3 Vehicle Records and Inspection Reports. 3-2
3-3.1 Motor Equipment Utilization Record, DD Form 1970. 3-5
3-3.2 Motor Vehicle Inspection Report (Transporting Hazardous Materials), DD Form 626. 3-5
3-3.3 Vehicle and Equipment Operational Record, NAVMC 10627. 3-12
3-3.4 Container Packing Certificate or Vehicle Packing Declaration, DD Form 2781. 3-12
3-3.5 Operator's Inspection Guide and Trouble Report, NAVFAC 9-11240/13. 3-12
3-3.6 Material Inspection and Receiving Report, DD Form 250. 3-12
3-3.7 Inspection Requirements by Commodity. 3-13
Railroad Car Certificate. Deleted during Rev 6. Moved to **NAVSEA SW023-AK-SAF-010**. 3-18
Railroad Car Inspection Report, NAVSEA 8023/3. Deleted During Rev 6. Moved to **NAVSEA SW023-AK-SAF-010**. 3-18
3-4 Shipping Papers. 3-18
3-4.1 Bill of Lading. 3-22
3-4.2 Signature and Tally Record (STR) DD Form 1907. 3-22
3-4.3 Issue Release/Receipt Document, Form 1348-1A. 3-23
3-4.4 Dangerous Goods Shipping Paper/Declaration and Emergency Response Information for Hazardous Materials Transported by Government Vehicles, DD Form 836. 3-23
3-4.5 Seals Notices and Tags. 3-23
3-4.6 Shipper's Declaration for Dangerous Goods Form. 3-32
3-4.7 DOD Multimodal Dangerous Goods Declaration, DD Form 2890. 3-32
3-4.8 Memorandum Receipt. 3-32
3-5 Reports of Incidents During Transit. 3-32
3-5.1 Motor Vehicle Accident Report, Standard Form (SF) 91. 3-32
3-5.2 Required Written Reports of Delays, Breakdowns, or Damaged Containers. 3-32
3-5.3 Reports of Security Violations. 3-38

TABLE OF CONTENTS (Continued)

Chapter/Paragraph **Page**

3-6 Reports of Discrepancy. 3-38
3-6.1 Transportation Discrepancy Report, DD Form 361. 3-38
3-6.2 Reporting Improper Packaging, Packing and/or Marking. 3-39

4 PREPARATION FOR SHIPMENT BY MILITARY AND COMMERCIAL MOTOR VEHICLES 4-1
4-1 Introduction. 4-1
4-1.1 Shipping Regulations. 4-1
4-2 Military and Commercial Motor Vehicle Specifications. 4-1
4-2.1 Fully Closed Vehicles. 4-3
4-2.2 Double Trailers. 4-3
4-2.3 Dromedaries. 4-3
4-2.4 Stake-Side Trucks, Open-Top Semi-Trailers, and Soft-Side Trailers. 4-4
4-2.5 Safety Equipment. 4-6
4-2.6 Red Emergency Lights. 4-6
4-3 Inspection of Empty Incoming Military and Commercial Motor Vehicles. 4-8
4-3.1 Cargo Space. 4-8
4-3.2 Mechanical Inspection. 4-10
4-4 Loading Inspection of Motor Vehicles. 4-11
4-4.1 Driver’s Responsibility. 4-11
4-4.2 Inspector’s Responsibility. 4-11
4-5 Loading and Handling Regulations. 4-11
4-5.1 General. 4-11
4-5.2 Blocking and Bracing. 4-12
4-5.3 Packages and Containers (Including Dromedaries). 4-12
4-5.4 Special Loads. 4-13
4-5.5 Driver’s Responsibilities During Loading Operations. 4-13
4-5.6 Cargo Handling Precautions. 4-14
4-5.7 Forbidden Material. 4-14
4-5.8 Cargo Compatibility. 4-14
4-5.9 Protection Against Shifting Cargo. 4-17
4-5.10 Loads Consisting of Hazardous Materials and Inert Materials. 4-17
4-6 Inspection Prior to Release of Loaded Motor Vehicle. 4-17
4-6.1 Driver’s Responsibility. 4-17
4-6.2 Inspector’s Responsibility. 4-18
4-7 Placarding. 4-19
4-7.1 Size and Shape. 4-19
4-7.2 Location and Display. 4-19
4-7.3 Placarding Loads Containing One Type of A&E 4-19
4-7.4 Placarding Combination Loads. 4-21
4-7.5 Placarding of Tank Motor Vehicles. 4-21
4-8 Seals. 4-21
4-8.1 DOD Approved Seals. 4-21
4-8.2 Wire Security Device. 4-22
4-9 Completion of Motor Vehicle Inspection. 4-22

TABLE OF CONTENTS (Continued)

Chapter/Paragraph **Page**

4-10 Shipping Papers/Written Instructions to Drivers. 4-23
4-10.1 Special Written Instructions for OCONUS Movements. 4-23
4-10.2 Dangerous Goods Certifications. 4-26
4-10.3 Transportation Facilities Guide. 4-26
4-11 Routes/Route Plans. 4-26

5 IN-TRANSIT REGULATIONS FOR MILITARY MOTOR VEHICLES 5-1
5-1 Introduction. 5-1
5-2 Driving Regulations. 5-1
5-2.1 Speed Regulations. 5-1
5-2.2 Minimum Speeds. 5-1
5-2.3 Driving Hours. 5-1
5-2.4 Drunken and Reckless Driving. 5-2
5-2.5 Arrest. 5-2
5-2.6 General Rules for Safe Driving. 5-2
5-2.7 Road Signs. 5-3
5-2.8 Yielding Right of Way. 5-3
5-2.9 Instructions for Specific Situations. 5-3
5-3 Driving Hazards. 5-5
5-3.1 Carbon Monoxide. 5-5
5-3.2 Damage to Cargo. 5-5
5-3.3 Weather Conditions. 5-5
5-4 Safety Measures. 5-5
5-4.1 Flame-Producing Devices. 5-6
5-4.2 Smoking Regulations. 5-6
5-4.3 Transporting Flammables. 5-6
5-4.4 Exposure to Weather. 5-6
5-4.5 Load Interference. 5-6
5-4.6 Warning Devices. 5-6
5-5 Protecting the Security of the Load. 5-7
5-5.1 Vehicle Security. 5-7
5-5.2 Seals. 5-7
5-5.3 Guarding Vehicles 5-9
5-5.4 Safe Haven. 5-9
5-6 Inspection in Transit. 5-9
5-7 Procedures Following an Accident. 5-10
5-7.1 Required Action. 5-10
5-7.2 Required Report. 5-11
5-8 Procedures Following a Breakdown. 5-12
5-8.1 Required Action. 5-12
5-8.2 Required Report. 5-13
5-9 Procedures in Burning-Area Operations. 5-13
5-9.1 Entering the Area. 5-13
5-9.2 Unloading the Vehicle. 5-13
5-9.3 Action During Electrical Storms. 5-13

TABLE OF CONTENTS (Continued)

Chapter/Paragraph **Page**

5-9.4 Leaving the Area. 5-13
5-10 Procedures in Case of Delay for More than 5 Hours. 5-13
5-10.1 Required Action. 5-13
5-10.2 Required Report. 5-14
5-11 Repackaging or Transfer of Load in Transit. 5-14
5-12 Procedures for Refueling a Loaded Motor Vehicle. 5-15
5-13 Parking a Loaded Motor Vehicle 5-16
5-13.1 General Restrictions. 5-17
5-13.2 Parking in the Public Domain. 5-17
5-13.3 Parking On-Station. 5-17
5-14 Procedures for Water Transportation. 5-18

6 DELIVERY AND INSPECTION OF LOAD AT DESTINATION 6-1
6-1 Introduction. 6-1
6-2 Incoming Inspection. 6-1
6-2.1 Shipping Papers. 6-1
6-2.2 Mechanical Inspection. 6-2
6-2.3 Placards. 6-2
6-2.4 Seals. 6-2
6-2.5 Tampering, Sabotage, or Theft. 6-2
6-2.6 Motor Vehicle Unloading. 6-3
6-2.7 Inspection of Less-Than-Truckload (LTL) Shipments. 6-3
6-3 Delivering the Load. 6-3
6-3.1 Shipping or Receiving Sheds and Transfer Depots. 6-3
6-3.2 Time Limits. 6-3
6-3.3 Docks, Piers and Wharves. 6-4
6-4 Driver’s Responsibility During Unloading. 6-4
6-5 Inspection of Empty Motor Vehicles. 6-5
6-5.1 Cargo Space. 6-5
6-5.2 Placards. 6-5
6-5.3 Seals or Seal Notices. 6-5
6-5.4 Contamination. 6-5
6-5.5 Release of Empty Motor Vehicle. 6-5
6-6 Empty Container Certification. 6-5
6-6.1 Marking and Sealing Empty Containers. 6-6
6-7 Inspection of Commercial Motor Vehicles Granted Temporary Storage and Refuge. 6-7
6-8 Exemption of Classified Shipments from Carrier Inspection. 6-8

7 RAILCAR INSPECTION
Deleted during Rev. 6. Moved to NAVSEA SW023-AK-SAF-010 7-1

8 MILVAN CONTAINER INSPECTION
SECTION I - SHIPPING ACTIVITY MILVAN INSPECTION 8-1
8-1 Introduction. 8-1

TABLE OF CONTENTS (Continued)

Chapter/Paragraph **Page**

8-2 Inspection of Empty Incoming MILVAN Container. 8-1
8-2.1 Pre-Loading Inspection. 8-1
8-2.2 Deficiencies. 8-2
8-3 Inspection of Loaded MILVAN Container. 8-2
8-3.1 General. 8-2
8-3.2 Mixed Load Compatibility 8-2
8-3.3 Loads Consisting of Hazardous and Non-Hazardous Materials. 8-2
8-3.4 Blocking and Bracing. 8-2
8-4 MILVAN Inspection Prior to Release. 8-2
8-5 Inspection of Sealed MILVAN Container. 8-3
8-5.1 General. 8-3
8-5.2 Security Seals. 8-3
8-5.3 Wire Security Device. 8-3
8-6 Placards. 8-3
8-7 MILVAN Signature. 8-3

SECTION II - RECEIVING ACTIVITY MILVAN CONTAINER INSPECTION 8-4
8-8 Introduction. 8-4
8-9 Inspection of Loaded Incoming MILVAN Container. 8-4
8-9.1 Weight and Condition. 8-4
8-9.2 Placards. 8-4
8-9.3 Tampering, Sabotage or Theft. 8-4
8-9.4 Load Inspection. 8-4
8-10 Inspection of Empty Containers. 8-4

9 FIRE REGULATIONS 9-1
9-1 Introduction. 9-1
9-2 Preparation. 9-1
9-3 Fire Prevention. 9-1
9-4 Passing Fires Along the Highway. 9-2
9-5 Firefighting Equipment. 9-2
9-5.1 Specification for Fire Extinguishers. 9-2
9-6 Firefighting Procedures. 9-3
9-6.1 Vehicle Fires 9-3
9-6.2 Cargo Fires 9-3

A CRITERIA FOR INSPECTION OF MOTOR VEHICLES DETAILED INSTRUCTIONS FOR COMPLETING DD FORM 626. . . . . A-1

B CRITERIA FOR INSPECTION OF RAILCARS DETAILED INSTRUCTIONS FOR COMPLETING NAVSEA FORM 8023/3 Deleted during Rev. 6. Moved to NAVSEA SW023-AK-SAF-010. . . . . B-1

C GENERAL INSTRUCTIONS FOR COMPLETION OF MOTOR VEHICLE ACCIDENT REPORT, STANDARD FORM (SF) 91. . . . . C-1

TABLE OF CONTENTS (Continued)

Chapter/Paragraph **Page**

D TITLE 49 CFR PART 397 TRANSPORTATION OF HAZARDOUS MATERIALS; DRIVING AND PARKING RULES Revised 1 October 2008 . . . . . D-1

LIST OF ILLUSTRATIONS

Figures	Title	Page
3-1	U. S. Government Motor Vehicle Operator's Identification Card, Optional Form 346 (Front and Back)	3-3
3-2	Medical Examiner's Certificate (Front and Back)	3-4
3-3	Motor Equipment Utilization Record, DD Form 1970 (Front)	3-7
3-3	Motor Equipment Utilization Record, DD Form 1970 (Back)	3-8
3-4	Motor Vehicle Inspection (Transporting Hazardous Materials), DD Form 626 (Sheet 1 of 3)	3-9
3-4	Motor Vehicle Inspection (Transporting Hazardous Materials, DD Form 626 (Sheet 2 of 3)	3-10
3-4	Motor Vehicle Inspection (Transporting Hazardous Materials), DD Form 626 (Sheet 3 of 3)	3-11
3-5	Vehicle and Equipment Operational Record, NAVMC 10627	3-14
3-6	Container Packing Certificate or Vehicle Packing Declaration, DD Form 2781	3-15
3-7	Operator’s Inspection Guide and Trouble Report, NAVFAC 9-11240/13	3-16
3-8	Material Inspection and Receiving Report, DD Form 250	3-17
3-9	Railroad Car Certificate. Deleted during Rev 6. Moved to **NAVSEA SW023-AK-SAF-010**	3-20
3-10	Railroad Car Inspection Report, NAVSEA Form 8023/3. Deleted during Rev 6. Moved to **NAVSEA SW023-AK-SAF-010**	3-21
3-11A	U.S. Government Bill of Lading, SF 1103	3-24
3-11B	Sample Commercial Bill of Lading	3-25
3-12	Signature and Tally Record, DD Form 1907 (Sheet 1 of 2)	3-26
3-12	Signature and Tally Record, DD Form 1907 (Sheet 2 of 2)	3-27
3-13	Issue Release/Receipt Document, DD Form 1348-1A	3-28
3-14	Dangerous Goods Shipping Paper/Declaration and Emergency Response Information for Hazardous Materials Transported by Government Vehicles, DD Form 836 (Sheet 1 of 2)	3-29
3-14	Dangerous Goods Shipping Paper/Declaration and Emergency Response Information for Hazardous Materials Transported by Government Vehicles, DD Form 836 (Sheet 2 of 2)	3-30
3-15	Seal Notice, NAVSUP Form 407	3-31
3-16	Waterproof Seal Tag Required for Classified Shipment	3-31
3-17	Shipper’s Declaration for Dangerous Goods	3-33
3-18	Motor Vehicle Accident Report, SF 91 (Sheet 1 of 4)	3-34
3-18	Motor Vehicle Accident Report, SF 91 (Sheet 2 of 4)	3-35
3-18	Motor Vehicle Accident Report, SF 91 (Sheet 3 of 4)	3-36
3-18	Motor Vehicle Accident Report, SF 91 (Sheet 4 of 4)	3-37
3-19	Transportation Discrepancy Report (TDR), DD 361	3-40
3-20	Government Bill of Lading Correction Notice, SF 1200	3-41
3-21	Report of Discrepancy (ROD), SF 364 (Sheet 1 of 2)	3-42
3-21	Report of Discrepancy (ROD), SF 364 (Sheet 2 of 2)	3-43
4-1	Types of Motor Vehicles Used for Transporting AA&E On-Station and Over Public Highways	4-2
4-2	Permissible Dromedary Load	4-4

LIST OF ILLUSTRATIONS (CONTINUED)

Figures	Title	Page
4-3	Safety Equipment Required on Vehicles	4-7
4-4	Rear End Door Assembly with Customs Catch Plate	4-22
4-5	Proper Placement of Cable Seal Locks	4-24
4-6	Application of Wire Security Device for Motor Vehicles and MILVAN Container Shipments	4-25
5-1	(A-C) Posting Warning Signals for Highway Stops	5-8
6-1	Use of Red Ribbon to Indicate an Empty Container	6-7
9-1	Summary of Emergency Response Information, Class/Division 1.1, 1.2, 1.3, 1.5 or 1.6 Explosives (Page 1 of 1)	9-4
9-2	Summary of Emergency Response Information, Class/Division 1.4 Explosives (Page 1 of 1)	9-5

LIST OF TABLES

Tables	Title	Page
2-1	Basic Summary of Explosives Driver Licensing Requirements	2-2
3-1	Inspection of Commercial and Organic Vehicles	3-13
4-1	General Compatibility Requirements for Hazardous Material Loaded On and Transported by Motor Vehicle Over Public Highway, or Loaded On and Transported by Rail	4-15
4-2	Compatibility Requirements for Class 1 (Explosive) Materials Loaded On and Transported by Motor Vehicle Over Public Highway or by Railcar	4-16
4-3	Placarding Requirements for Motor Vehicles and Railcars	4-20

SAFETY SUMMARY

This publication is a transportation safety manual which contains the instructions and regulations necessary for the safe transportation of arms, ammunition, explosives and related hazardous materials (AA&E) and ammunition, explosives and related hazardous materials (A&E) by military and commercial motor vehicles, and MILVAN containers. While the entire content of this publication is a warning to the user, the following warnings appear in the text and are repeated here for emphasis:

WARNING

Electronic communication devices will not be used. (Page 2-11.)

WARNING

Plastic bedliners generate static electricity and are not authorized for use in the transport of scrap or bulk explosives in any container, nor for the transport of any ammunition or explosive that is not packaged in its approved shipping container. Special care shall be taken to secure all cargo in motor vehicles when plastic bedliners are authorized, due to the slippery nature of the liner surface. In addition, the filling of gas cans with flammable liquids while sitting on a liner in a truck bed is prohibited, as it has been identified as a cause of inadvertent ignition. (Page 4-3 and Page 4-9.)

WARNING

One person shall remain in the cab of a diesel powered vehicle. The transmission shall be left in neutral and the parking brake applied. There is a possibility that a warm engine could self-start if the vehicle should roll. (Page 4-13.)

WARNING

Matches, lighters or other fire, flame, or spark-producing devices shall not be permitted within 25 feet of a motor vehicle loaded with A&E. (Page 5-5.)

WARNING

Flares, fusees and signals that produce flame shall not be used as warning devices for disabled vehicles carrying A&E. (Page 5-6.)

WARNING

Do not attempt to jump start a motor vehicle that has A&E cargo onboard. (Page 5-12.)

WARNING

No hot work shall be performed on a vehicle with A&E cargo present in the vehicle. (Page 5-12.)

WARNING

Do not repair the vehicle in an enclosed garage or work area. (Page 5-12)

WARNING

Drivers shall not dispose of damaged packages/containers -- standing rule applies to both empty packages/containers and those that contain residual A&E items. (Page 5-14.)

WARNING

If the vehicle is diesel-powered, set the transmission in neutral. (Page 5-15.)

WARNING

Compressed Natural Gas (CNG) powered vehicles shall not be refueled within 100 feet of A&E. (Page 5-16.)

WARNING

In the event of a fire, if a carbon dioxide (CO^2) fire extinguisher is present for use in extinguishing the fire, do not direct its content at or into an open fuel tank. Even with a grounded fuel hose, static electricity can be generated and may ignite the fuel vapor, causing an explosion. This is due to high velocity streams of CO^2 being injected into the concentrated vapors of hydrocarbon fuels such as jet propulsion (JP), gasoline, diesel, etc. (Page 5-16.)

WARNING

Under no circumstances shall the driver of a vehicle carrying Class/ Division 1.1 through 1.3 A&E park in a public garage, on a public parking lot, or leave the vehicle unattended. (Page 5-17.)

WARNING

One person shall remain in the cab of a diesel powered vehicle. The transmission shall be left in neutral and the parking brake applied. There is a possibility that a warm engine could self-start if the vehicle should roll. (Page 5-19 and Page 6-4.)

WARNING

Do not attempt to fight any fire that has reached the cargo area. (Page 9-3.).

The following "CAUTION" statements appear in the text of this manual, and are repeated here for emphasis:

CAUTION

Drivers shall avoid sharp braking during downhill travel. This operation is one of the principal causes of load shifting and usually results in damage to the cargo. (Page 5-5.)

CAUTION

Explosives drivers shall adhere to DOT regulations and state and local laws governing the use of snow chains during inclement weather. Snow chains have the potential for creating sparks. (Page 5-6.)

CAUTION

Stake-side trucks, open-top semi-trailers, or soft-side trailers shall not be substituted for enclosed trailers or vans when transporting palletized or non-palletized/unitized boxed ordnance (see paragraph 4-2a.). Soft-side trailer curtains and their supports are not designed to restrain cargo, as are the walls of enclosed trailers and vans, and do not provide the same level of security. (Page 4-3)

Notes are also used in the text to emphasize unusual or special procedures and conditions.

This page left intentionally blank

CHAPTER 1

INTRODUCTION

1-1. PURPOSE OF MANUAL.

The purpose of this manual is to provide Navy and Marine Corps explosives drivers and shipping inspectors (military, civilian, and contractor personnel) with the regulations governing the movement and inspection of arms, ammunition, explosives and related hazardous materials (AA&E) by military and commercial motor vehicles, and MILVAN containers for inbound and outbound shipments. The regulations pertaining to these conveyances are either cited or referenced. Additional technical guidance for on-station movement is presented in NAVSEA SW023-AG-WHM-010 (current revision). This manual supersedes NAVSEA SW020-AF-HBK-010, Fifth Revision dated 1 July 2007 and shall be distributed to all explosives drivers and shipping inspectors. Title 49 Code of Federal Regulations (CFR) Part 397, "Transportation of Hazardous Materials, Driving and Parking Rules" is provided in appendix D. All explosives drivers shall have a copy of chapters 5 and 9, appendix C, and SF-91 (figure 3-18) with them at all times when transporting ammunition, explosives and related hazardous materials (A&E). These documents are found in an individual file on this CD-ROM entitled "Glove Box Edition of Motor Vehicle Driver and Shipping Inspector's Manual."

NOTE

All regulations and guidelines specific to the shipment of AA&E by rail have been removed from this manual. This information is now found in NAVSEA SW023-AK-SAF-010, "Movement and Inspection of Ammunition, Explosives and Related Hazardous Materials by Rail".

1-2. SCOPE.

The information provided in this manual is consistent with 49 CFR administered by the Department of Transportation (DOT) and conforms to the minimum allowable limits set forth by official Navy directives. This manual does not apply to operators of material handling equipment (MHE). MHE instructions and regulations are presented in NAVSEA SW023-AH-WHM-010 (current revision).

1-2.1. MANDATORY AND ADVISORY REGULATIONS. The requirements in this manual that use the commands "shall", "will", or "must" are mandatory, unless they are specifically waived or exempted by CNO in accordance with the provisions of OPNAVINST 8020.14/MCO P8020.11 (series). Advisory requirements are those in which "may" or "should" are used. These advisory requirements shall be followed unless exceptions are authorized in writing by the shore station commanding officer.

NOTE

The Commanding Officer of a shore activity has the authority to impose and enforce more stringent measures than those specified by higher command. Consequently, stricter means may be invoked by the Commanding Officer in the interest of preventing hazardous situations.

1-3. ORGANIZATION OF MANUAL.

This manual is organized into nine chapters, which describe explosive safety regulations, requirements and procedures applicable to both military and civilian motor vehicle drivers and shipping inspectors. The introductory chapters provide information on administrative requirements, i.e. qualifications/training, security, disciplinary actions, personnel assignments, etc. The subsequent chapters provide information relating to specific situations encountered during working operations, i.e. requirements prior to departure, in-transit regulations, instructions for arrival, inspections of motor vehicles and MILVAN containers, and firefighting regulations. Appendices A, C and D provide specific inspection criteria for motor vehicles, instructions for completing the Motor Vehicle Accident Report, SF 91, and driving and parking rules (49 CFR Part 397).

1-3.1. TERMS AND ABBREVIATIONS. The definitions of terms and abbreviations commonly used in conjunction with the transportation and inspection of AA&E and other explosives safety requirements appears separately on this CD-ROM. These definitions are intended to reduce ambiguity and to provide uniform descriptions of technical information throughout this manual.

1-3.2. REFERENCE DOCUMENTS. A list of documents that contain the information referenced throughout this manual and related explosives safety technical documentation is presented separately on this CD-ROM. These documents are essential for complete understanding of the regulations pertaining to the transportation and inspection of AA&E contained within this manual.

1-4. REPORTING DEFICIENCIES IN MANUAL.

Training activities, supply points, Naval Weapons Stations and other shore activities are requested to arrange for the maximum practical use and evaluation of NAVSEA technical manuals. All errors, omissions, discrepancies, and suggestions for improvement to NAVSEA technical manuals shall be reported to Commander, Naval Surface Warfare Center, Port Hueneme Division (NSWC/PHD) (Code 310), 4363 Missile Way, Port Hueneme, CA 93043-4307 on NAVSEA Technical Manual Deficiency/ Evaluation Report (TMDER) Form 4160/1. A copy of NAVSEA TMDER Form 4160/1 is included at the end of this publication. For activities with internet access, this form should be completed and processed using NSWC/PHD website: https://nsdsa2.phdnswc.navy.mil. To expedite a response, also send as an email to dawn.lauer@navy.mil. All feedback comments shall be thoroughly investigated and originators will be advised of TMDER resolution. If you prefer to submit a TMDER using a word file please click here. TMDER

1-5. REQUESTS FOR DEVIATIONS.

Deviations from the mandatory AA&E transportation requirements specified in this manual in response to emergencies and/or events based on operational necessity shall be submitted to Naval Ordnance Safety and Security Activity (NOSSA) (N5) or Commandant, Marine Corps (CMC) (LPD) for Navy and Marine Corps commands respectively.

1-6. DATE OF PUBLICATION.

The publication date, shown on the title page of this manual, or any subsequent changes/revisions, represent the estimated distribution date and is effective upon receipt.

CHAPTER 2

ADMINISTRATIVE REQUIREMENTS

2-1. INTRODUCTION.

This chapter outlines the administrative requirements pertaining to explosives drivers and shipping inspectors of arms, ammunition, explosives and related hazardous materials (AA&E). The following information is provided:

a. Qualifications and training required for certification as an explosives driver.

b. Personal responsibilities of individuals holding positions as explosives drivers and shipping inspectors.

c. Disciplinary actions and penalties.

d. Personnel assignments.

e. Small arms ammunition and Safety of Life at Sea (SOLAS) materials

f. Security (e.g. Security Risk Category (SRC), classified shipments, etc.)

g. Department of Transportation Special Permits (DOT-SPs); Navy Certificates of Equivalency (COEs).

2-2. QUALIFICATIONS FOR EXPLOSIVES DRIVERS.

All Navy and Marine Corps military, civilian and contractor personnel shall be qualified and properly licensed to operate motor vehicles transporting ammunition, explosives and related hazardous materials (A&E). License requirements differ between civilian, military and contractor personnel. A summary of basic licensing requirements, and military and civilian requirements for use of the U.S. Government Motor Vehicle Operator's Identification Card, OF-346 as related to explosives drivers, is presented in table 2-1. In general, applicants for explosive driver certification must have the required training per paragraph 2-3, and meet the following criteria:

a. Civilian drivers shall hold a valid state license with a Commercial Driver's License (CDL) endorsement for hazardous materials when driving off base on public roads, or when crossing public roads, as cited in 49 CFR 383.121. Military drivers shall hold a valid state license when driving off base, but are exempt from CDL requirements per 49 CFR 383.3. Criteria for private contractors is addressed in paragraph 2-2.1.

b. Both military and civilian drivers shall have a Medical Examiner's Certificate (MEC), see paragraph 2-2.2.

c. Each explosives driver must possess one form of identification that includes a photograph.

d. Each driver shall take a road test conducted in a motor vehicle that meets the basic type, size, and Gross Vehicle Weight (GVW) of the motor vehicle(s) he/she will be assigned to drive. The OF-346 attests to the drivers' proficiency for operating such vehicles.

e. All drivers of government owned motor vehicles used for transporting A&E both on and off station shall possess a valid OF-346 which displays the explosives driver endorsement (an annotation on the OF-346 stating "Explosives Driver-Must Hold a Current Medical Certificate"). This is not to be confused with the additional CDL hazardous materials endorsement required on the state driver's license of civilian explosives drivers transporting AA&E off-station.

Table 2-1. Basic Summary of Explosives Driver Licensing Requirements

TYPE OF DRIVER	ON BASE (see note 1)	OFF BASE
UP TO 10,000 lbs. GVW		
Civilian	OF-346 and valid state license (see notes 2 and 3)	OF-346 and valid state license with CDL HAZMAT endorsement (see note 2)
Military	OF-346 (see note 2 and 3)	OF-346 and valid state license (see note 2)
OVER 10,000 lbs. GVW		
Civilian	OF-346 and valid state license (see notes 2 and 3)	OF-346 and valid state license with CDL HAZMAT endorsement (see note 2)
Military	OF-346 (see note 2 and 3)	OF-346 and valid state license (see note 2)

NOTES:

(1) "ON-BASE" means within the physical boundaries of the base perimeter. In the context of explosive driver licensing requirements, if any portion of the planned route requires access to public roads or crosses over a public road(s), then the movement is considered to be off base.

(2) The OF-346 must be annotated with the following statement: "Explosives Driver - Must hold a current Medical Certificate."

(3) When an OF-346 is issued for on base operations only, the OF-346 shall be annotated: "VALID FOR USE ON-BASE ONLY."

2-2.1. DEPARTMENT OF DEFENSE (DOD) CONTRACT PERSONNEL. Per NAVFAC P-300, "Management of Civil Engineering Support Equipment," contracts and agreements should require that equipment and operators comply with the licensing requirements of state and local motor vehicle laws. DOD contract personnel operating government vehicles for the transport of A&E shall be issued an OF-346 per DTR 4500.9-R; contractor personnel operating contractor-owned vehicles shall not be issued an OF-346, but must meet all other stated requirements for civilian explosives drivers. DOD contract personnel assigned to operate either government owned or contractor owned/leased motor vehicles/

Click the button below to view the ACN on this publication.

ACN 1/10

equipment in performance of a contract shall be certified, by the contractor and at the contractor's expense, as being fully qualified to operate the vehicles/equipment to which they are assigned. The prime contractor shall document all operator qualifications. This documentation shall be provided to the contract administrator prior to an operator engaging in any mode of equipment operation. Documentation shall be retained by the contract administrator.

2-2.2. MEDICAL EXAMINATIONS. The Manual of the Medical Department (MANMED) publication, NAVMED P-117, Article 15-107, contains comprehensive guidance on the necessary medical examinations and standards for personnel to qualify as explosives drivers. The following regulations apply to all military (active duty and reservists) and civilian (civil service, contractor, subcontractor) personnel. All medical examinations shall be performed by a licensed medical examiner per NAVMED P-117 guidance.

a. Military. Military personnel must meet the standards of NAVMED P-117, Article 15-107 and comply with the medical surveillance/certification requirements listed in Program 721 of the latest edition of NEHC-TM OM 6260, published by the Navy Environmental Health Center. This special duty physical examination is required every five years until age 50, then annually thereafter.

b. Civilian. Civilian personnel must comply with the standards of NAVMED P-117, Article 15-107. Physical examinations shall be conducted every two years until age 60, then annually thereafter.

2-2.2.1. Alcohol and Drugs. Any applicant for explosives driver certification shall be screened for alcohol and drug use per the requirements of NAVMED P-117, Article 15-107. In accordance with the Department of the Navy (DON) Drug-Free Workplace Program (DFWP), explosives drivers are considered to be in a "testing designated position". Therefore, civilian explosives drivers are subject to random testing as implemented by the DON Human Resources Manual, Subchapter 792.3. Military explosives drivers are subject to random testing per guidance presented NAVMED P-117, DOD Directive 1010.1, OPNAVINST 5350.4 (series) and/or any other applicable regulations. Explosives driver certification shall be revoked for any driver found to be under the influence of alcohol or drugs while on duty. Temporary revocation of certification may be necessary when the use of physician prescribed drugs is likely to interfere with the ability to operate a motor vehicle safely.

2-2.3. AGE AND EXPERIENCE. Explosives drivers shall be 18 years of age or older to operate motor vehicles transporting A&E on-station, and shall be 21 years of age or older for off-station operations. They shall have a safe driving record and shall have had training and experience with the type of equipment being operated. Training may be provided by the employer or other private or public sources.

2-2.4. ABILITY TO READ AND UNDERSTAND REGULATIONS. Explosives drivers shall be able to read, write and understand the English language, and to complete the various forms for which they are responsible. They shall be required to read and understand the regulations pertaining to their duties as described in the publication.

2-3. TRAINING REQUIREMENTS.

Military, civilian and contractor personnel selected for positions involving responsibility for handling and/or transporting A&E shall have the required certification training, or shall be scheduled to attend and successfully complete the required courses as a condition of employment. Required training of personnel shall be scheduled and/or completed within six months of reporting for duty. The following requirements apply:

a. Personnel who certify or prepare and load A&E for shipment must receive formal initial and refresher training per 49 CFR 172.704 and DOD regulations. Training may be provided by the employer or private or public sources.

b. Personnel authorized to certify A&E shall be so designated in writing.

2-3.1. EXPLOSIVE SAFETY TRAINING PROGRAM. NAVSEA OP 5 Volume 1, Appendix D, provides in-depth guidance on the Navy's explosives safety training program. Military personnel (active and reserve duty) assigned to shore station positions involving responsibilities for A&E should attempt to complete the applicable explosives safety training prior to reporting. Civilians (including contractors) assigned to positions involving responsibilities for A&E shall also have the applicable explosives safety training. It is the responsibility of the activity to consult with legal personnel to ensure that the explosives safety training for contractors is specifically documented in the contract if a condition of employment is specified. All personnel, unless otherwise noted, shall be scheduled to complete, or have completed, the required training within 6 months of reporting.

2-3.1.1. Training Requirements (Shipping Inspectors). The following courses are mandatory for personnel responsible for performing inspections of both empty and loaded conveyances used in the transport of A&E. Refer to NAVSEA OP 5 Volume 1, Appendix D for guidance on registration, etc.

a. Naval Motor Vehicle and Railcar Inspection Course (AMMO-51). Availability: Defense Ammunition Center (DAC), McAlester, OK or DAC On-Site. Intended to certify Navy and Marine Corps civilian, military and contractor personnel in the inspection of motor vehicles and railcars transporting A&E. Course content includes vehicle placarding, packaging and dunnaging inspection per applicable DOT and DON requirements, etc. Completion of AMMO-51 classroom version is one-time only; shipping inspectors shall be recertified in this course every two years via Computer Based Training (CBT).

b. Basic Explosives Safety (AMMO-18). Availability: DAC (web-only). Provides a basic understanding of the hazards of A&E and acquaints students with the explosives safety principles and practices outlined in NAVSEA OP 5 Volume 1. Completion of AMMO-18 is one time only, but activities may require this course as a refresher for personnel who have been away from ordnance handling duties for a year or more.

c. Intermodal Dry Cargo Container Convention for Safe Container (CSC) Reinspection Course (AMMO-43). Availability: DAC (web-only). Provides information for shipping inspectors required to inspect or reinspect intermodal dry cargo containers per the CSC standards. Course content includes

survey of CSC test requirements, detailed analysis of inspection and reinspection criteria found in the CSC, U.S. Public Law and Joint Service Regulations.

2-3.1.2. Training Requirements (Explosives Drivers). Candidate explosives drivers shall possess a valid Motor Vehicle Operator's Identification Card (OF-346) and a valid state license (with hazardous materials endorsement, where required) in accordance with the criteria presented in Table 2-1, prior to taking the Ammunition and Explosives Driver 12-Hour Training Course (as outlined below). Initial training in the 12-hour driver's course is one time only; a 4-hour refresher course is required every two years to maintain certification as an explosives driver. Explosives drivers shall also take the AMMO-18 course, "Basics Explosives Safety" (web only). Completion of the Naval Motor Vehicle and Railcar Inspection Course AMMO-51 is not mandatory, but is highly recommended.

a. Ammunition and Explosives Driver 12-Hour Training Course. The Naval Ordnance Safety and Security Activity (NOSSA) maintains a course curriculum to assist activities in this training effort. The course is available on the Explosives Safety Technical Manuals (ESTM) CDROM, distributed by the Naval Packaging, Handling, Storage and Transportation (PHST) Center, Code E421, (732) 866-2890. This course is designed to train candidate drivers of A&E for both on-station and public highway movement. Each activity will use this curriculum, or their equivalent course, to satisfy the 12-hour training requirement and to develop a 4-hour refresher course. Instruction is provided in the following areas:

(1) Driving trucks, truck-tractors with semi-trailers and other vehicles.

(2) Regulations pertaining to the handling, loading, and transportation of A&E.

(3) Proper use of fire extinguishers, and instruction in emergency response procedures.

(4) Proper completion and filing of required forms and reports.

2-3.1.3. Training Requirements (Instructors). Candidate instructors of the Ammunition and Explosives 12-Hour Driver Training Course must have successfully completed the 12-hour driver course, and have also taken the "Instructional Delivery Continuum (IDC) Apprentice Trainer Course", per NAVSEA OP 5 Volume 1, Appendix D. Completion of this course is one-time only. However, instructors shall take refresher training every two years by completing the Naval Motor Vehicle and Railcar Inspection Course, AMMO-51 via CBT. Although this course also covers rail shipment (which is not part of the 12-hour driver course), the basic principles expressed in the AMMO-51 course will provide appropriate refresher training for instructors of the explosives driver's course. Instructors who have not taken refresher training will have six months from the date of this publication to complete this requirement.

2-3.2. MAINTAINING SAFETY SKILLS. Explosives drivers are encouraged to take a personal interest in maintaining a high level of skill. It is the duty of explosives drivers to be thoroughly familiar with their activity's safety manual, ensuring personal and public safety. They should be active in job related portions of their activity's safety program and should attend refresher courses given by the safety office. Drivers and shipping inspectors should attend "stand-up" safety meetings. These meetings should provide information on changes to regulations and operating procedures, first aid, firefighting techniques,

new equipment, AA&E classes, etc. Also, explosives drivers shall routinely check their activity's bulletin boards; attend scheduled film showings about A&E transportation; and, refer to appropriate publications provided by their activity's safety office.

2-4. PERSONAL RESPONSIBILITIES OF EXPLOSIVES DRIVERS AND SHIPPING INSPECTORS.

Explosives drivers and shipping inspectors shall adhere to mandatory safety requirements, procedures and security measures set forth in this manual when transporting A&E. Specific guidance on explosives drivers and shipping inspectors responsibilities are provided in chapters 4 through 9. Specific driving regulations are covered in chapter 5. For further guidance, shipping inspectors and explosives drivers should contact their supervisor or safety director.

2-4.1. USE OF PROTECTIVE EQUIPMENT. Inspector's protective equipment must be worn while performing assigned duties and while in a hazardous area. Protective helmets, gloves (while inspecting all conveyances and MILVAN's), safety glasses (while performing eye hazard work), and safety shoes are required. Other protective equipment such as self-contained breathing apparatus or face masks shall be readily available and used when necessary. For example, inspections performed on conveyances that contain or were used for transport of poisons or any items which meet the definition of a "hazardous material" as stated in the list of terms and abbreviations (see paragraph 1-3.1).

2-4.2. REQUESTING STATION PHOTOGRAPHERS. The shipping inspector shall request a photographer take photographs of the following:

a. Missing and/or damaged cargo or dunnaging.

b. Evidence of sabotage or tampering.

c. Damaged or unsatisfactory incoming conveyances (empty or loaded) that do not meet 49 CFR requirements.

d. Inadequate blocking, bracing or chains.

2-5. DRIVER LIABILITY.

Personnel operating Navy owned motor vehicles shall be responsible for compliance with all DOD regulations, and state and local traffic laws. Any driver in violation of any such regulation or law is subject to fines and/or imprisonment.

2-6. DISCIPLINARY ACTION AND PENALTIES.

Drivers are subject to disciplinary actions and penalties for violation of civil and/or military regulations. The degree of disciplinary action and penalty which may be imposed by Naval authority is dependent upon the individual's past record and the discretion of the Commanding Officer (CO). Criminal penalties may also be imposed as set forth in 49 CFR 107.333.

2-6.1. REPORTING TRAFFIC VIOLATIONS OR ACCIDENTS. All traffic violations or accidents shall be reported to the supervisor, security officer or safety officer, and shall be noted on the operator's driving record. Specific steps to be taken by the driver in the event of an accident or delay are outlined in chapter 5 of this manual.

2-6.2. SUSPENSION OR REVOCATION OF A NAVY DRIVER'S PERMIT. The CO shall suspend or revoke a Navy driver's permit if, in his/her opinion, it would be in the best interest of the Navy.

2-6.3. AUTOMATIC REVOCATION OF A NAVY DRIVER'S PERMIT. A Navy driver's permit shall be revoked automatically for the following violations, and notice of such action shall be filed in the driver's personnel record:

a. Driving while under the influence of alcohol, illegal drugs, a derivative of a narcotic drug, or the misuse of a prescription drug.

b. The known transportation or possession of alcohol, illegal drugs or a derivative of a narcotic drug.

c. Failure to report an accident in which the driver was involved.

d. Leaving the scene of an accident in which the driver was involved.

e. Smoking while in or within 25 feet of a vehicle loaded with A&E.

f. Revocation of state driver's license.

First offenders of violations *a.* through *d.* shall be disqualified for 1 year after the date of conviction or forfeiture of bond or collateral. A driver shall be disqualified for 3 years if he/she is convicted of a subsequent offense, or forfeits bond or collateral within 3 years of a prior offense.

2-6.4. REINSTATEMENT. Any driver whose permit has been suspended or revoked for any of the preceding violations shall be required to pass the mental and physical examinations described in paragraphs 2-2.2 and 2-2.2.1 prior to the issuance of a new driver's permit. Drivers shall be required to pass a driving test given after a state and/or installation waiting period is met. Reinstatement shall be granted only with the permission of the activity CO.

2-7. PERSONNEL ASSIGNMENTS.

Authorized drivers and their qualified representatives assigned to transport AA&E shall follow the guidance set forth herein.

2-7.1. AUTHORIZED DRIVERS. No persons other than those certified as explosives drivers shall operate motor vehicles carrying A&E. Explosives drivers shall observe the following regulations in the performance of their duties:

a. Per 49 CFR 395.3, no driver shall drive more than 11 hours following 10 consecutive hours off duty; nor shall a driver drive for any period after having been on duty 14 hours following 10 consecutive hours off duty.

b. One driver shall guard the vehicle during rest stops. A driver may also act as a security guard if cleared to the level of security designated by the material being transported. An unaccompanied armed driver does not constitute an armed guard.

c. In emergencies, drivers shall divide the responsibilities of warning passersby, notifying law enforcement authorities, rendering first aid and guarding the vehicle.

2-7.2. QUALIFIED REPRESENTATIVES. A qualified representative is a person who has been designated by the shipper to attend the motor vehicle and:

a. Is aware of the nature of the cargo contained in the motor vehicle;

b. Has been instructed in emergency procedures per NOSSAINST 8020.18 (series);

c. Is authorized and trained to move the motor vehicle.

2-7.3. DRIVER/RIDER CRITERIA FOR ORGANIC MOVEMENTS ON AND OFF-STATION.

2-7.3.1. Off-Station Drivers/Riders. Two explosives drivers or one explosives driver and one qualified representative are required for all AA&E movements off-station using organic means of transportation. When three-passenger motor vehicles are used, only the two assigned explosives drivers (or explosive driver and qualified representative) shall occupy the cab of the vehicle. No other passengers are permitted either in the cab or in the cargo compartment of the three-passenger motor vehicle. When a six-passenger motor vehicle is used, two explosives drivers or one explosives driver and one qualified representative together with three authorized personnel may occupy the cab of the vehicle. No personnel are permitted to ride in the cargo compartment of the six-passenger motor vehicle.

NOTE

An exception to this two-driver rule may be permitted during point-to-point on-station moves that require crossing over a public roadway; or movements over public access roads between an on-station point of origin and an adjacent annexed on-station destination point that is located in reasonably close proximity to the point of origin. Examples include movements between an ammunition issue point and a live-fire training range, between an inland conveyance holding area and a pier, or between a magazine and an operating building, etc. In this case, the movement can be carried out with one explosives driver with a two-way communication device. This exception criteria pertains only to organic movements (DOD or Navy-owned vehicles driven by a civilian or military explosives driver). Station managers must take the SRC of the AA&E and the local Force Protection Condition (FPCON) environment into account

when applying this exception rule and be prepared to make policy adjustments to compensate for heightened states of alert. See NAVSEA SW020-AG-SAF-010 for transportation protective service (TPS) instructions peculiar to varying SRCs.

2-7.3.2. On-Station Drivers/Riders. One explosives driver is permitted for all AA&E movements on-station using organic means of transportation. When three-passenger vehicles motor vehicles are used, the explosives driver and two authorized riders are permitted to occupy the cab of the vehicle. When six-passenger motor vehicles are used, the explosives driver and five authorized riders are permitted to occupy the cab of the vehicle. This instruction is applicable to those instances when the motor vehicle must cross over a public highway to reach its destination at another on-station location. No personnel are permitted to occupy the cargo compartment of the AA&E loaded motor vehicle during an on-station movement except when limited quantities of 1.4S small arms ammunition is being transported. Under these circumstances, responsible local station managers must establish criteria for determining the allowable quantity limits per each movement based on assessed safety and security risks relative to mission requirements. The cargo must be adequately secured in the body of the motor vehicle, and securely anchored seats must be provided for the additional personnel.

2-7.4. LIMITED QUANTITIES OF SMALL ARMS AMMUNITION AND SAFETY OF LIFE AT SEA (SOLAS) MATERIALS. On a case-by-case basis, commanding officers may authorize the transport of limited quantities of small arms ammunition, 1.4S, except .50 caliber, and SOLAS materials using privately owned vehicles (POV) or government vehicles as detailed in paragraph 2-7.4.1.

a. For small arms ammunition, these movements are restricted to transportation between ammunition issue points and facilities for marksmanship training, qualification, competition, or other related requirements on or near the station. While in transit, the ammunition must be in the custody of designated military or security personnel. A DD Form 1907 and DD Form 836 shall be issued to the custodian personnel. The ammunition must be under constant surveillance during stops en route to destination. Vehicles are subject to the load limit criteria of paragraph 1-7.4.1. Full-package quantities of ammunition must be packaged in sealed MIL-SPEC wooden or wire bound wooden boxes. Less than full package quantities must be transported in sealed MIL-SPEC inner containers such as M1, M2 or M19 series metal containers. Except under these particular circumstances, weapons and ammunition of the same caliber shall not be transported aboard the same motor vehicle.

b. For SOLAS materials, these movements are restricted to transportation directly to the pier for maintenance aboard ships and small craft. While in transit, the ammunition must be in the custody of designated personnel. The materials must be under constant surveillance during stops en route to destination and must be packaged in the original container/kits provided by the manufacturer.

c. For both SOLAS and small arms ammunition, the packages must be secured in the cargo compartment to prevent lateral movement. The cargo compartment must be equipped with a locking mechanism. The cargo compartment must be separated from the passenger compartment by suitable means. The vehicle must also be equipped with one serviceable fire extinguisher (refer to Chapter 9). The driver must possess a valid state driver's license. If government vehicles are used, drivers must also possess a Government Motor Vehicle Operator's Identification Card (OF-346). Under these particular circumstances, the explosives driver training criteria presented in Chapter 2 are not applicable.

2-7.4.1. Small Arms Gross Cargo Weight Limitations.

Vehicle Type	Gross Cargo Weight
Sedan	200 lbs.
Van	250 lbs.
SUV	250 lbs.
Pick-up	300 lbs.

2-7.5. VEHICLE COMMUNICATION DEVICES. An organic motor vehicle used for transporting A&E off-station must be equipped with a HERO certified two-way telecommunications device. Drivers must maintain two-way radio communication capability with both the shipping and receiving activities, as well as municipal law enforcement and emergency response officials along the planned route.

HERO SAFE ordnance may be transported in vehicles equipped with HERO certified electrical and electronic devices (to include cellular and satellite phones). The transmitting antenna must be 10 feet or more from the ordnance. Very low power hand-held devices may meet the exception criteria outlined in Table 3-1 of NAVSEA OP 3565 Volume 2. Refer to NAVSEA OP 3565 Volume 3 for the HERO classification of the cargo.

For information on this manual click here

2-7.6. INSTRUCTIONS FOR ASSISTANT DRIVERS DURING FLIGHT-LINE AND COMBAT AIRCRAFT LOADING AREA ORDNANCE OPERATIONS. The following instructions shall apply when employing the services of an Assistant Driver [(A) Driver] during flight-line and Combat Aircraft Loading Area (CALA) ordnance operations:

a. These instructions are applicable to 5-Ton military tactical vehicles (M923, M925, M927 and M928) with K-4A and MHU-151/M trailers in tow while transporting ordnance along designated on-station routes in support of flight-line and CALA operations.

b. The (A) Driver will occupy a seat in the cargo compartment of the 5-Ton tactical military motor vehicle. The cargo compartment of the 5-Ton motor vehicle will contain limited quantities of mission essential ordnance items associated with flight-line and CALA operations. A K-4A or MHU-151/M trailer loaded with main ordnance assemblies will be attached to the 5-Ton motor vehicle.

c. Mission essential ordnance items present in the cargo compartment of the 5-Ton motor vehicle shall consist of limited quantities of fuzes, cartridge actuated devices, igniters and other items necessary to complete main ordnance assembly build-up operations. Note: Limited quantity is defined as that amount of ordnance/ordnance components necessary to meet the requirements of the immediate build-up evolution.

d. The (A) Driver’s duty while occupying a position in the cargo compartment of the transport vehicle will be to ensure that the main ordnance assemblies aboard the K-4A or MHU-151/M trailer and the component ordnance items present in the cargo compartment of the 5-Ton motor vehicle are transported in a safe manner.

e. The ordnance components present in the cargo compartment of the 5-Ton tactical vehicle will be secured to prevent movement in-transit (NAVSEA SW023-AG-WHM-010 applies).

f. The ordnance components present in the cargo compartment of the tactical vehicle will be packaged in approved standard military specification containers.

g. The (A) Driver will maintain a voice communication capability with the primary driver throughout the flight-line/CALA ordnance transport evolution.

WARNING

Electronic communication devices will not be used.

h. The (A) Driver will be seated in a manner that affords maximum visibility of the trailer and the ordnance in tow. The (A) Driver's seat will be secured to the cargo compartment of the 5-Ton vehicle.

i. Once stopped to load/offload ordnance, the motor vehicle will be moved only upon the driver's visual observation of a clearance signal from the (A) Driver.

j. The station flight-line Standard Operating Procedure (SOP) will be amended to reflect the (A) Driver authorization criteria detailed above.

2-8. SECURITY.

The following paragraphs provide a brief outline of security policies, procedures, and responsibilities applicable to the movement of AA&E within the continental United States (CONUS) by all modes of transportation. Refer to NAVSEA SW020-AG-SAF-010 for further detail.

2-8.1. SECURITY RISK CATEGORY (SRC). The SRC relates to a DOD hazard and physical security control system whereby DOD-owned AA&E items are classified according to their level of inherent threat to public safety and/or security sensitivity. SRCs are assigned to AA&E items that have been identified as having characteristics that require them to be accounted for, stored, transported or otherwise secured and handled in a special manner to ensure their safety and integrity (see NAVSEA SW020-AG-SAF-010). SRCs are defined in DOD 5100.76-M and DTR 4500.9-R.

2-8.1.1. Controlled Inventory Item Code (CIIC). The CIIC provides a means for identifying DOD supply system items that have characteristics that require that they be accounted for, secured, segregated, or handled in a special manner to ensure their safeguard and integrity. The CIIC designates the degree of security assigned to an item (see NAVSEA SW020-AG-SAF-010). CIIC's are defined in DOD 4000.25-2-M and NAVSUP Pub 485.

2-8.2. MINIMUM TRANSPORTATION SECURITY STANDARDS AND FORCE PROTECTION CONDITIONS (FPCON). Refer to NAVSEA SW020-AG-SAF-010 for in-depth information regarding minimum transportation security standards for shipments of SRC I through IV and UNCAT Division 1.1 through 1.3 A&E moving under FPCONs in effect at points of origin and destination.

NOTE

All SRC I movement off-station requires the accompaniment of a Security Escort Vehicle (SEV) under all FPCON conditions.

2-8.3. CLASSIFIED MATERIAL. For a motor vehicle transporting AA&E bearing a security classification, the explosives driver and a qualified representative shall be cleared to the level appropriate for the materials being transported. Refer to NAVSEA SW020-AG-SAF-010 for further information.

2-8.3.1. Use of Military-Owned Guard Cars and Carrier-Owned Equipment for Transporting Escorts. Procedures governing the use of military-owned guard cars and carrier-owned cabooses or other passenger carrying equipment to transport guards or technical escorts are outlined in DTR 4500.9-R.

2-8.3.2. Technical Escort Service. The requirements for technical escort service are provided in OPNAVINST 8070.1 (series).

2-9. IN-TRANSIT SECURITY.

Specific in-transit requirements for protecting the security of vehicles transporting AA&E, i.e. guarding vehicles, seals, and safe haven are covered in detail in chapter 5.

2-10. DEPARTMENT OF TRANSPORTATION SPECIAL PERMITS.

The Department of Transportation (DOT) regulations governing the transportation of A&E are binding upon all shippers and carriers who transport A&E in interstate or foreign commerce. However, if a proposed shipment includes A&E not in compliance with the regulations published in 49 CFR, or A&E that is not covered by any existing regulations; the DOT will issue a Special Permit for that shipment. DOT special permit numbers shall be marked on the outside of the shipping container and on the Bill of Lading (BL) with a copy of the special permit attached to the BL. The shipping inspector shall ensure that the shipment is in compliance with the provisions of the special permit.

2-11. PACKAGING CERTIFICATES OF EQUIVALENCY (COEs)

A&E shipped by, for, or to the DOD, including commercial shipments prepared under U.S. contract, must be packaged in accordance with the regulations of 49 CFR 173 and 178. When packagings are not in accordance with the 49 CFR regulations, the DOD can certify that the packagings used are of equal or greater strength and efficiency. These certifications are issued as COEs. COEs, unlike CAAs, can be issued for packages containing Hazard Class 1 items that have an interim hazard classification assigned but do not have an EX number assigned. A COE can be issued in instances where the packaging differs from what is prescribed by 49 CFR (e.g., wood box instead of a steel box) or when packaging instruction 101 is specified. COE's are not required for Class 1 items with a net item weight greater than 882 pounds (400 kilograms) or volume greater than 119 gallons; see NAVSEA SW020-AC-SAF-010. Each COE is identified by a Certification Control Number (CCN), which is preceded by the issuing service: "NA" for Navy, "AR" for Army, and "AF" for Air Force. A typical COE might be identified by the CCN "NA 92-504".

2-12. COMPETENT AUTHORITY APPROVALS.

CAA guidance is provided in NAVSEA SW020-AG-SAF-010.

This page left intentionally blank

CHAPTER 3

FORMS AND REPORTS

3-1. INTRODUCTION.

This chapter presents the official forms and reports required for the transportation of arms, ammunition, explosives and related hazardous materials (AA&E). Covered in this chapter are the required personal papers that verify the driver's identification and certification, forms concerning the assignment of vehicles, shipping papers, and the required reports should an incident occur en route. All forms, shipping papers and reports relating to the transportation of AA&E shall be prepared in a legible manner. Shippers shall retain shipping papers for two years; carriers shall retain shipping papers for one year.

3-2. DRIVER'S PERSONAL PAPERS.

During operations on-station and off-station, both military and civilian explosives drivers are required to have on their person a medical examiner's certificate (see paragraph 3-2.2), and the appropriate military and/or civilian license(s) with necessary endorsements, per criteria outlined in table 2-1. These papers verify that the operator is qualified and authorized to operate vehicles for the transportation of ammunition, explosives and related hazardous materials (A&E).

3-2.1. U.S. GOVERNMENT MOTOR VEHICLE OPERATOR'S IDENTIFICATION CARD, OPTIONAL FORM 346. Optional Form (OF) 346 (figure 3-1), the U. S. Government Motor Vehicle Operator's Identification Card, also called "driver's permit," is issued to qualified personnel authorizing them to operate government vehicles. The OF-346 is issued by the designated representative of the Commanding Officer (CO) when the applicant is qualified according to the requirements stated in paragraphs 2-2 and 2-3. Possession of this permit alone, however, does not constitute authority to drive vehicles transporting A&E. Unless the notation "Explosives Driver - Must hold a current medical certificate" appears on the permit as shown in figure 3-1, the driver cannot be assigned to transport A&E. Individuals holding an OF 346 shall always have the permit on their person when operating a vehicle. It shall be their responsibility to apply every two years for renewal of the driver's permit. Yearly endorsement of the driver's permit is not required. It is recommended that activities render all possible assistance to explosives drivers to ensure that permits do not expire. Refer to NAVSEA SW023-AH-WHM-010 for Material Handling Equipment (MHE) operator qualifications.

3-2.2. MEDICAL EXAMINER'S CERTIFICATE. To qualify as explosives drivers, Navy and Marine Corps military, civilian and contractor personnel must meet the physical examination requirements outlined in paragraph 2-2.2. Applicants who pass the prescribed examinations shall be issued a Medical Examiner's Certificate. The certificate shall be generated by the originating activity and shall be similar in format to figure 3-2. The top portion of figure 3-2 was created using Department of Transportation (DOT) criteria; the certificate of qualification on the back of the form was Navy generated. It is suggested that the certificate be prepared in wallet size for handling convenience.

3-2.2.1. Medical Examiner Criteria. A licensed medical examiner shall complete and sign the medical examiner's certificate for all Navy and Marine Corps military, civilian and contractor personnel per NAVMED P-117 guidance.

3-2.2.2. Certificate Maintenance. All explosives drivers shall be responsible for keeping their certificate current (see paragraph 2-2.2). Civilian and contractor personnel shall be required to carry the original certificate on their person while driving; a duplicate certificate or legible copy shall be kept in an appropriate location at the driver's home activity. Military personnel shall be required to carry a duplicate copy on their person while driving; original certificates for military personnel are kept with their health records. All such records shall be reviewed annually by designated safety/explosives safety personnel.

3-3. VEHICLE RECORDS AND INSPECTION REPORTS.

Records of an assigned vehicle's performance, hours in use and deficiencies are kept by the explosives driver on each trip. The driver is also required to participate in the inspection of the vehicle and to sign appropriate inspection reports verifying either safety of the load for transit or rejection of the vehicle.

OF 346 11/85 USOPM FPM Chapter 930	**U.S. Government Motor Vehicle Operator's Identification Card**	Card No. 00000

Name of Operator (Not Transferable)	Sex	Signature of Operator (Not valid until signed)
J. SMITH	M	J. Smith

Date of Birth	Social Security No.	Name and Location of Issuing Unit
12/31/59	111-22-3333	NAWS CHINA LAKE

Height	Weight	Hair Color	Eye Color
6'	190	BR	BR

Date Issued	Date Expires	Signature and Title of Issuing Official
1/15/2009	1/15/2011	J. Doe TRANS. OFF.

The holder of this card is qualified to operate U.S. Government vehicles and/or equipment specified, subject to the restrictions set forth on the other half of this card. Card must be carried at all times when operating Government vehicles.

Restrictions

QUALIFIED TO OPERATE

Type Vehicle and/or Equipment	Capacity	Qualifying Official
TR TRACTOR & SEMI TRLR	10 TONS	J. DOE
TRUCK, CARGO PICK-UP	½ TON	J. DOE
VAN	5 TON	J. DOE

OTHER RECORDS *(Optimal)*

*EXPLOSIVES DRIVER - MUST HOLD A CURRENT MEDICAL CERTIFICATE.

NSN 7540-00-634-3999 **50346-101**

(SAMPLE)

FIGURE 3-1. U. S. Government Motor Vehicle Operator's Identification Card, Optional Form 346 (Front and Back)

CLICK HERE TO REPRODUCE AND ANNOTATE THIS FORM

MEDICAL EXAMINER'S CERTIFICATE

I certify that I have examined _____ in accordance with the requirements of NAVSEA OP 5 and with knowledge of his/her duties, I find this person is qualified; and, if applicable, only when:

☐ wearing corrective lenses
☐ wearing hearing aid

The information I have provided regarding this physical examination is true and complete. A complete examination form with any attachment embodies my findings completely and correctly, and is on file in my office.

SIGNATURE OF MEDICAL EXAMINER	TELEPHONE	DATE
MEDICAL EXAMINER'S NAME AND POSITION (PRINT)		
MEDICAL EXAMINER'S LICENSE OR CERTIFICATE NO. / ISSUING STATE		
SIGNATURE OF DRIVER	DRIVER'S LICENSE NO.	STATE
ADDRESS OF DRIVER		
MEDICAL CERTIFICATE EXPIRATION DATE		

CERTIFICATE OF QUALIFICATION

_____ (Name of Driver)

_____ * Employee Identification Number

_____ (Signature of Driver)

I certify that the above driver is regularly driving a vehicle operated by the below named carrier and is fully qualified in accordance with the requirements of NAVSEA OP 5. This certificate of qualification expires upon expiration of the Medical Examiner's Certificate.

Issued on _____ (Date)

Issued by _____ (Name of Carrier)

_____ (Address)

_____ (Signature)

_____ (Title)

FIGURE 3-2. Medical Examiner's Certificate (Front and Back)

*** An employee identification number is optional. Examples of what activities may use, if desired, are the last four digits of the operator's social security number, an office code/number, or some other locally generated and approved identifying designator.**

3-3.1. MOTOR EQUIPMENT UTILIZATION RECORD, DD FORM 1970. DD Form 1970 (figure 3-3), or a similar locally produced document, is completed by the transportation activity at the time of motor vehicle assignment for either on-station or off-station operations. The form is returned to the dispatcher upon return of the equipment. All information pertaining to use of the motor vehicle, such as the operator's name, destination, date, time, and mileage are recorded on DD Form 1970. The driver signs the form and lists the mileage and hour meter readings when the equipment is returned. The remarks column will be used by the operator to record unusual operation, abnormal occurrences during operation or other information as directed.

3-3.2. MOTOR VEHICLE INSPECTION REPORT (TRANSPORTING HAZARDOUS MATERIALS), DD FORM 626. Motor vehicles used for the transportation of A&E Hazard Class/ Division 1.1 through 1.4 and other regulated materials, 2.3 (RIH) poisonous gases or 6.1 (PIH) poisonous materials over public highways will be inspected by the shipping activity using DD Form 626 (figure 3-4), this manual, NAVSEA SW020-AG-SAF-010, DOD safety regulations; and, 49 CFR. Refer to table 3-1 regarding shipments containing only 1.4 A&E. The DD Form 626 provides for mechanical inspection of the motor vehicle, cargo spaces and other specified information. The form is completed each time a motor vehicle carrying A&E arrives at or leaves a naval activity, even if the A&E is destined to another activity. The originator of this form is the motor transportation officer or a designated inspector. The inspector of the cargo is the ordnance officer or a designated official. Instructions for inspectors are listed on the reverse side of the form and are further explained in appendix A. Motor vehicles with unsatisfactory conditions are noted on DD Form 626 and shall not be accepted for loading. Vehicles will not be rejected, however, if deficiencies are corrected before loading. Local inspection forms or DD Form 626 may be used to inspect motor vehicles used to transport inert and/or related AA&E.

3-3.2.1. The driver is required to participate in the inspection and to sign the form when satisfied with the mechanical condition of the motor vehicle and the loading of the cargo. The driver, by signing the form at the origin and destination, shares responsibility with the shipping inspectors for the suitability of the vehicle and the safety of the load. If item 24 on DD Form 626 is checked, the driver is not required to inspect the load and is therefore relieved of the requirements as stated in items 18 and 19. Item 24 is checked only when the shipment contains classified material.

3-3.2.2. For truckload (TL) and less-than-truckload (LTL) shipments, the original inspection report, DD Form 626 will be given to the vehicle driver at origin with instructions to deliver it to the consignee at destination. A copy will be retained by the inspection activity. If a driver is relieved by another qualified driver, the DD Form 626 shall also accompany the relief driver to destination. The relief driver should check the motor vehicle per the requirements of DD Form 626 and paragraph 5-6 before continuing the trip. Any discrepancies should be annotated on the form and signed by the relief driver. The receiving activity will complete the destination portion of the DD Form 626 before the shipment is accepted for delivery. In addition, when a commercial vehicle has been rejected from loading or the driver found unsatisfactory, one copy will be sent to each of the following locations: nearest DOT field office, carrier home office, Military Surface Deployment and Distribution Command (SDDC), and Naval Ordnance Safety and Security Activity (NOSSA) (N5).

3-3.2.3. For activities receiving non-hazardous shipments by vehicles loaded with A&E, the mechanical inspection per DD Form 626 is to be performed, documented and presented to the driver when arriving at or leaving a naval activity. There is no requirement to inspect the A&E cargo area, unless a defect is obvious, or if the A&E cargo is required to be moved for offloading of a non-hazardous shipment. If either of these conditions exist, a full DD Form 626 inspection is required. The inspection shall be documented on a separate DD Form 626 with comments in the “Remarks” section specifying that the inspection was performed when arriving and departing a naval activity for receipt of a non-hazardous shipment. When neither of these conditions exist, only a mechanical inspection shall be documented on the DD Form 626.

CLICK HERE TO REPRODUCE AND ANNOTATE THIS FORM

MOTOR EQUIPMENT UTILIZATION RECORD

1. DATE *(YYYYMMDD)*	2. TYPE OF EQUIPMENT	3. REGISTRATION NO./SERIAL NO.	4. ADMINISTRATION NO.

5. ORGANIZATION NAME	6a. FUEL	b. OIL

ACTION	9. TIME		10. MILES	11. HOURS	
7a. 1ST OPERATOR *(Last Name, First, M.I.)*	a. IN				12a. REPORT TO *(Last Name, First, M.I.)*
8a. OPERATOR'S SIGNATURE	b. OUT				13a. DISPATCHER'S SIGNATURE
	c. TOTAL				
7b. 2ND OPERATOR *(Last Name, First, M.I.)*	a. IN				12b. REPORT TO *(Last Name, First, M.I.)*
8b. OPERATOR'S SIGNATURE	b. OUT				13b. DISPATCHER'S SIGNATURE
	c. TOTAL				
7c. 3RD OPERATOR *(Last Name, First, M.I.)*	a. IN				12c. REPORT TO *(Last Name, First, M.I.)*
8c. OPERATOR'S SIGNATURE	b. OUT				13c. DISPATCHER'S SIGNATURE
	c. TOTAL				
7d. 4TH OPERATOR *(Last Name, First, M.I.)*	a. IN				12d. REPORT TO *(Last Name, First, M.I.)*
8d. OPERATOR'S SIGNATURE	b. OUT				13d. DISPATCHER'S SIGNATURE
	c. TOTAL				

14. DESTINATION	15. TIME		16. RELEASED BY *(Signature)*	17. REMARKS
	a. ARRIVE	b. DEPART		
(1) FROM				
(2) TO				
(3) TO				
(4) TO				
(5) TO				
(6) TO				
(7) TO				
(8) TO				
(9) TO				
(10) TO				
(11) TO				
(12) TO				
(13) TO				
(14) TO				
(15) TO				
(16) TO				

DD FORM 1970, NOV 1999 PREVIOUS EDITION MAY BE USED.

FIGURE 3-3. Motor Equipment Utilization Record, DD Form 1970 (Front)

CLICK HERE TO REPRODUCE AND ANNOTATE THIS FORM

14. DESTINATION	15. TIME		16. RELEASED BY *(Signature)*	17. REMARKS
	a. ARRIVE	b. DEPART		
(17) TO				
(18) TO				
(19) TO				
(20) TO				
(21) TO				
(22) TO				
(23) TO				
(24) TO				
(25) TO				
(26) TO				
(27) TO				
(28) TO				
(29) TO				

INSTRUCTIONS

*1. Date. Enter the calendar date the equipment is to be used.

2. Type of Equipment. Enter the type of equipment as designated in the equipment log.

3. Registration Number or Serial Number. Enter the equipment/ registration number or serial number.

4. Administration Number. Enter the unit number or administrative number.

5. Organization Name. Enter the organization to which the equipment is assigned.

6. Fuel/Oil. Enter the amount of fuel (gallons) and/or oil (quarts) obtained for the equipment.

*7. Operator. Enter the name of the equipment operator.

8. Operator's Signature. The equipment operator (item 6) will enter signature immediately upon receipt of equipment.

*9. Time. Indicate time to the nearest 5 minutes using the 24-hour clock.
a. In. Enter time equipment was returned from dispatch or use.
b. Out. Enter the time the equipment was released for operation by the dispatcher.
c. Total. Enter total time the equipment was in the possession of the operator. Time is obtained by subtracting the time listed in "Out" line from that listed on the "In" line.

*10. Miles. Will be recorded to the nearest whole mile.
a. In. The operator will enter the mileage reading when the equipment is returned. If odometer is inoperative, enter estimated mileage.
b. Out. The dispatcher will enter the mileage reading at the time of dispatch.
c. Total. Enter the difference between the "Out" and "In" mileage.

*11. Hours. Will be recorded to the nearest whole hour. On those items which require servicing on an hourly basis and are not equipped with an hour meter, enter the estimated hours of operation.
a. In. The operator will enter the hour meter reading upon completion of the equipment usage.
b. Out. The dispatcher will neter the hour meter reading prior to equipment release.
c. Total. Enter the total hours dispatched for operation.

*12. Report To. Enter the name of the individual to whom the operator is to report.

13. Dispatcher's Signature. Self-explanatory.

14. Destination. Indicate each location at which a trip begins and ends. Normally this starts from the equipment pool ("From" Line) and ends at the same place after one or more intervening destinations.

*15. Time. All time will be recorded using the 24-hour clock, rounded off to the nearest 5 minutes.
a. Arrive. Enter the arrival time at each destination.
b. Depart. Enter the departure time from the motor pool and each succeeding location.

16. Released By. The person in charge of equipment on dispatch will release by signing on the line indicating the destination where the equipment was released to the operator. Upon termination of equipment used, but not moved, the person in charge will release the equipment by signing in the top block of this column.

17. Remarks. The remarks column will be used by the operator to record unusual operation or abnormal occurrences during operation, or other information as directed.

*Items marked with an asterisk (*) have been registered in the DOD Data Element Program.

FIGURE 3-3. Motor Equipment Utilization Record, DD Form 1970 (Back)

CLICK HERE TO REPRODUCE AND ANNOTATE THIS FORM

*Refer to appendix A for further guidance.

MOTOR VEHICLE INSPECTION (TRANSPORTING HAZARDOUS MATERIALS)

(Read Instructions before completing this form.)

This form applies to all vehicles which must be marked or placarded in accordance with Title 49 CFR.	1. BILL OF LADING/TRANSPORTATION CONTROL NUMBER

SECTION 1 - DOCUMENTATION	ORIGIN a.	DESTINATION b.
2. CARRIER/GOVERNMENT ORGANIZATION		
3. DATE/TIME OF INSPECTION		
4. LOCATION OF INSPECTION		
5. OPERATOR(S) NAME(S)		
6. OPERATOR(S) LICENSE NUMBER(S)		
7. MEDICAL EXAMINER'S CERTIFICATE*		

8. *(X if satisfactory at origin)*								9. CVSA DECAL DISPLAYED ON COMMERCIAL EQUIPMENT*	YES	NO
a. MILITARY HAZMAT ENDORSEMENT		d. ERG OR EQUIVALENT COMMERCIAL:		YES		NO		a. TRUCK/TRACTOR		
b. VALID LEASE*		e. DRIVER'S VEHICLE INSPECTION REPORT*						b. TRAILER		
c. ROUTE PLAN		f. COPY OF 49 CFR PART 397								

SECTION II - MECHANICAL INSPECTION

All items shall be checked on empty equipment prior to loading. Items with an asterisk shall be checked on all incoming loaded equipment.

10. TYPE OF VEHICLE(S)	11. VEHICLE NUMBER(S)

12. PART INSPECTED *(X as applicable)*	ORIGIN (1) SAT	ORIGIN (1) UNSAT	DESTINATION (2) SAT	DESTINATION (2) UNSAT		ORIGIN (1) SAT	ORIGIN (1) UNSAT	DESTINATION (2) SAT	DESTINATION (2) UNSAT	COMMENTS (3)
a. SPARE ELECTRICAL FUSES					k. EXHAUST SYSTEM					
b. HORN OPERATIVE					l. BRAKE SYSTEM*					
c. STEERING SYSTEM					m. SUSPENSION					
d. WINDSHIELD/WIPERS					n. COUPLING DEVICES					
e. MIRRORS					o. CARGO SPACE					
f. WARNING EQUIPMENT					p. LANDING GEAR*					
g. FIRE EXTINGUISHER*					q. TIRES, WHEELS, RIMS					
h. ELECTRICAL WIRING					r. TAILGATE/DOORS*					
i. LIGHTS AND REFLECTORS					s. TARPAULIN*					
j. FUEL SYSTEM*					t. OTHER *(Specify)*					

13. INSPECTION RESULTS *(X one)* **ACCEPTED** ☐ **REJECTED** ☐

(If rejected give reason under "Remarks". Equipment will be approved if deficiencies are corrected prior to loading.)

14. SATELLITE MOTOR SURVEILLANCE SYSTEM: *(X one)* **ACCEPTED** ☐ **REJECTED** ☐

15. REMARKS

16. INSPECTOR SIGNATURE *(Origin)*	17. INSPECTOR SIGNATURE *(Destination)*

SECTION III - POST LOADING INSPECTION

This section applies to Commercial and Government/Military vehicles. All items will be checked prior to release of loaded equipment and shall be checked on all incoming loaded equipment.

	ORIGIN (1) SAT	ORIGIN (1) UNSAT	DESTINATION (2) SAT	DESTINATION (2) UNSAT	COMMENTS (3)
18. LOADED IAW APPLICABLE SEGREGATION/COMPATIBILITY TABLE OF 49 CFR					
19. LOAD PROPERLY SECURED TO PREVENT MOVEMENT					
20. SEALS APPLIED TO CLOSED VEHICLE; TARPAULIN APPLIED ON OPEN EQUIPMENT 21. PROPER PLACARDS APPLIED					
22. SHIPPING PAPERS/DD FORM 836 FOR GOVERNMENT VEHICLE SHIPMENTS					
23. COPY OF DD FORM 626 FOR DRIVER					
24. SHIPPED UNDER DOT SPECIAL PERMIT 868					

25. INSPECTOR SIGNATURE *(Origin)*	26. DRIVER(S) SIGNATURE *(Origin)*
27. INSPECTOR SIGNATURE *(Destination)*	28. DRIVER(S) SIGNATURE *(Destination)*

DD FORM 626, MAR 2007 PREVIOUS EDITION IS OBSOLETE. Page 1 of 3 Pages

FIGURE 3-4. Motor Vehicle Inspection (Transporting Hazardous Materials), DD Form 626 (Sheet 1 of 3)

CLICK HERE TO REPRODUCE AND ANNOTATE THIS FORM

*Refer to appendix A for further guidance.

INSTRUCTIONS

SECTION I - DOCUMENTATION

General Instructions.

All items (2 through 9) will be checked at origin prior to loading. Items with an asterisk (*) apply to commercial operators or equipment only. Only Items 2 through 7 are required to be checked at destination.

Items 1 through 5. Self explanatory.

Item 6. Enter operator's Commercial Driver's License (CDL) number or Military OF-346 License Number. CDL and OF-346 must have the HAZMAT and other appropriate endorsements IAW 49 CFR 383.

Item 7. *Enter the expiration date listed on the Medical Examiner's Certificate.

Item 8.a. APPLIES TO MILITARY OPERATORS ONLY. Military Hazardous Materials Certification. In accordance with applicable service regulations, ensure operator has been certified to transport hazardous materials.

b. *Valid Lease. Shipper will ensure a copy of the appropriate contract or lease is carried in all leased vehicles and is available for inspection. (49 CFR 376.12 and 376.11(c)(2)).

c. Route Plan. Prior to loading any Hazard Class/Division 1.1, 1.2, or 1.3 (Explosives) for shipment, ensure that the operator possesses a written route plan in accordance with 49 CFR Part 397. Route Plan requirements for Hazard Class 7 (Radioactive) materials are found in 49 CFR 397.101.

d. Emergency Response Guidebook (ERG) or Equivalent. Commercial operators must be in possession of an ERG or equivalent document. Shipper will provide applicable ERG page(s) to military operators.

e. *Driver's Vehicle Inspection Report. Review the operator's Vehicle Inspection Report. Ensure that there are no defects listed on the report that would affect the safe operation of the vehicle.

f. Copy of 49 CFR Part 397. Operators are required by regulation to have in their possession a copy of 49 CFR Part 397 (Transportation of Hazardous Materials Driving and Parking Rules). If military operators do not possess this document, shipper will provide a copy to operator.

Item 9. *Commercial Vehicle Safety Alliance (CVSA) Decal. Check to see if equipment has a current CVSA decal and mark applicable box. Vehicles without CVSA, check documentation of the last vehicle periodic inspection and perform DD Form 626 inspection.

SECTION II - MECHANICAL INSPECTION

General Instructions.

All items (12.a. through 12.t.) will be checked on all incoming empty equipment prior to loading. All UNSATISFACTORY conditions must be corrected prior to loading. Items with an asterisk (*) shall be checked on all incoming loaded equipment. Unsatisfactory conditions that would affect the safe off-loading of the equipment must be corrected prior to unloading.

SECTION II *(Continued)*

Item 12.a. Spare Electrical Fuses. Check to ensure that at least one spare fuse for each type of installed fuse is carried on the vehicle as a spare or vehicle is equipped with an overload protection device (circuit breaker). (49 CFR 393.95)

b. Horn Operative. Ensure that horn is securely mounted and of sufficient volume to serve purpose. (49 CFR 393.81)

c. Steering System. The steering wheel shall be secure and must not have any spokes cracked through or missing. The steering column must be securely fastened. Universal joints shall not be worn, faulty or repaired by welding. The steering gear box shall not have loose or missing mounting bolts or cracks in the gear box mounting brackets. The pitman arm on the steering gear output shaft shall not be loose. Steering wheel shall turn freely through the limit of travel in both directions. All components of a power steering system must be in operating condition. No parts shall be loose or broken. Belts shall not be frayed, cracked or slipping. The power steering system shall not be leaking. (49 CFR 396 Appendix G)

d. Windshield/Wipers. Inspect to ensure that windshield is free from breaks, cracks or defects that would make operation of the vehicle unsafe; that the view of the driver is not obscured and that the windshield wipers are operational and wiper blades are in serviceable condition. Defroster must be operative when conditions require. (49 CFR 393.60, 393.78 and 393.79)

e. Mirrors. Every vehicle must be equipped with two rear vision mirrors located so as to reflect to the driver a view of the highway to the rear along both sides of the vehicle. Mirrors shall not be cracked or dirty. (49 CFR 393.80)

f. Warning Equipment. Equipment must include three bidirectional emergency reflective triangles that conform to the requirements of FMVSS No. 125. FLAME PRODUCING DEVICES ARE PROHIBITED. (49 CFR 393.95)

g. Fire Extinguisher. Military vehicles must be equipped with two serviceable fire extinguishers with an Underwriters Laboratories rating of 10 BC or more. (Commercial motor vehicles must be equipped with one serviceable 10 BC Fire Extinguisher). Fire extinguisher(s) must be located so that it is readily accessible for use and securely mounted on the vehicle. The fire extinguisher must be designed, constructed and maintained to permit visual determination of whether it is fully charged. (49 CFR 393.95)

h. Electrical Wiring: Electrical wiring must be clean and properly secured. Insulation must not be frayed, cracked or otherwise in poor condition. There shall be no uninsulated wires, improper splices or connections. Wires and electrical fixtures inside the cargo area must be protected from the lading. (49 CFR 393.28, 393.32, 393.33)

DD FORM 626, MAR 2007 Page 2 of 3 Pages

FIGURE 3-4. Motor Vehicle Inspection (Transporting Hazardous Materials, DD Form 626 (Sheet 2 of 3)

CLICK HERE TO REPRODUCE AND ANNOTATE THIS FORM

*Refer to appendix A for further guidance.

INSTRUCTIONS

SECTION II *(Continued)*

i. Lights/Reflectors. (Head, tail, turn signal, brake, clearance, marker and identification lights, Emergency Flashers). Inspect to see that all lighting devices and reflectors required are operable, of proper color and properly mounted. Ensure that lights and reflectors are not obscured by dirt or grease or have broken lenses. High/Low beam switch must be operative. Emergency Flashers must be operative on both the front and rear of vehicle. (49 CFR 393.24, 25, and 26)

j. Fuel System. Inspect fuel tank and lines to ensure that they are in serviceable condition, free from leaks, or evidence of leakage and securely mounted. Ensure that fuel tank filler cap is not missing. Examine cap for defective gasket or plugged vent. Inspect filler necks to see that they are in completely serviceable condition and not leaking at joints. (49 CFR 393.83)

k. Exhaust System. Exhaust system shall discharge to the atmosphere at a location to the rear of the cab or if the exhaust projects above the cab, at a location near the rear of the cab. Exhaust system shall not be leaking at a point forward of or directly below the driver compartment. No part of the exhaust system shall be located where it will burn, char or damage electrical wiring, fuel system or any other part of the vehicle. No part of the exhaust system shall be temporarily repaired with wrap or patches. (49 CFR 393.83)

l. Brake System (to include hand brakes, parking brakes and Low Air Warning devices). Check to ensure that brakes are operational and properly adjusted. Check for audible air leaks around air brake components and air lines. Check for fluid leaks, cracked or damaged lines in hydraulic brake systems. Ensure that parking brake is operational and properly adjusted. Low Air Warning devices must be operative. (49 CFR 393.40, 41, 42, 43, 44, 45, 47, 48, 49, 50, 51, 52, 53, and 55)

m. Suspension. Inspect for indications of misaligned, shifted or cracked springs, loosened shackles, missing bolts, spring hangers unsecured at frame and cracked or loose U-bolts. Inspect for any unsecured axle positioning parts, and sign of axle misalignment, broken torsion bar springs (if so equipped). (49 CFR 393.207)

n. Coupling Devices (Inspect without uncoupling). Fifth Wheels: Inspect for unsecured mounting to frame or any missing or damaged parts. Inspect for any visible space between upper and lower fifth wheel plates. Ensure that the locking jaws are around the shank and not the head of the kingpin. Ensure that the release lever is seated properly and safety latch is engaged. Pintle Hook, Drawbar, Towbar Eye and Tongue and Safety Devices: Inspect for unsecured mounting, cracks, missing or ineffective fasteners (welded repairs to pintle hook is prohibited). Ensure safety devices (chains, hooks, cables) are in serviceable condition and properly attached. (49 CFR 393.70 and 71)

o. Cargo Space. Inspect to ensure that cargo space is clean and free from exposed bolts, nuts, screws, nails or inwardly projecting parts that could damage the lading. Check floor to ensure it is tight and free from holes. Floor shall not be permeated with oil or other substances. (49 CFR 393.84)

p. Landing Gear. Inspect to ensure that landing gear and assembly are in serviceable condition, correctly assembled, adequately lubricated and properly mounted.

SECTION II *(Continued)*

q. Tires, Wheels and Rims: Inspect to ensure that tires are properly inflated. Flat or leaking tires are unacceptable. Inspect tires for cuts, bruises, breaks and blisters. Tires with cuts that extend into the cord body are unacceptable. Thread depth shall not be less than: 4/32 inches for tires on a steering axle of a power unit, and 2/32 inches for all other tires. Mixing bias and radial on the steering axle is prohibited. Inspect wheels and rims for cracks, unseated locking rings, broken, loose, damaged or missing lug nuts or elongated stud holes. (49 CFR 393.75)

r. Tailgate/Doors. Inspect to see that all hinges are tight in body. Check for broken latches and safety chains. Doors must close securely. (49 CFR 177.835(h))

s. Tarpaulin. If shipment is made on open equipment, ensure that lading is properly covered with fire and water resistant tarpaulin. (49 CFR 177.835(h))

t. Other Unsatisfactory Condition. Note any other condition which would prohibit the vehicle from being loaded with hazardous materials.

Item 14. For AA&E and other shipments requiring satellite surveillance, ensure that the Satellite Motor Surveillance System is operable. The DTTS Message Display Unit, when operative, will display the signal "DTTS ON". The munitions carrier driver, when practical, will position the DTTS message display unit in a manner that allows the shipping inspector or other designated shipping personnel to observe the "DTTS ON" message without climbing aboard the cab of the motor vehicle.

SECTION III - POST LOADING INSPECTION

General Instructions.

All items will be checked prior to the release of loaded equipment. Shipment will not be released until deficiencies are corrected. All items will be checked on incoming loaded equipment. Deficiencies will be reported in accordance with applicable service regulations.

Item 18. Check to ensure shipment is loaded in accordance with 49 CFR Part 177.848 and the applicable Segregation or Compatibility Table of 49 CFR 177.848.

Item 19. Check to ensure the load is secured from movement in accordance with applicable service outload drawings.

Item 20. Check to ensure seal(s) have been applied to closed equipment; fire and water resistant tarpaulin applied on open equipment.

Item 21. Check to ensure each transport vehicle has been properly placarded in accordance with 49 CFR 172.504.

Item 22. Check to ensure operator has been provided shipping papers that comply with 49 CFR 172.201 and 202. For shipments transported by Government vehicle, shipping paper will be DD Form 836.

Item 23. Ensure operator(s) sign DD Form 626, are given a copy and understand the hazards associated with the shipment.

Item 24. Applies to Commercial Shipments Only. If shipment is made under DOT Special Permit 868, ensure that shipping papers are properly annotated and copy of Special Permit 868 is with shipping papers.

DD FORM 626, MAR 2007 Page 3 of 3 Pages

FIGURE 3-4. Motor Vehicle Inspection (Transporting Hazardous Materials), DD Form 626 (Sheet 3 of 3)

3-3.3. VEHICLE AND EQUIPMENT OPERATIONAL RECORD, NAVMC 10627. NAVMC 10627 (figure 3-5) is a vehicle inspection checklist used by the Marine Corps to ensure that motor vehicles are in good mechanical condition before they are used to ship AA&E. NAVMC 10627 is completed each day a Marine Corps vehicle is used for on-station operations. NAVMC 10627 may also be used in lieu of DD Form 626 when transporting small quantities of small arms ammunition (1.4S) for short distances off-station between the ammunition issue point and the range in support of training exercises. Under these circumstances, the motor vehicle inspections normally performed by certified motor vehicle inspector personnel at points of origin and destination may be waived. Note that this special authorization does not relieve the station from exercising its responsibilities with respect to packaging, marking, labeling and blocking and bracing requirements normally applicable to ammunition movements off-station. Station Standard Operating Procedures (SOPs) must include instructions that clearly indicate the operator's responsibilities with respect to the use of NAVMC Form 10627.

3-3.3.1. NAVMC 10627 is initiated by the activity providing the vehicle. The activity dispatcher assigns the vehicle and qualified operator for the trip. Damage or deficiencies noted before, during or after operations are recorded in the remarks section of the form. NAVMC 10627 is returned to the originating activity dispatcher upon completion of the trip.

3-3.4. CONTAINER PACKING CERTIFICATE OR VEHICLE PACKING DECLARATION, DD FORM 2781. The International Maritime Dangerous Goods (IMDG) code provisions require packing certification for water movements. The shipping activity may use DD Form 2781 (figure 3-6) to accompany the shipping papers for movements of A&E via commercial conveyances destined for water transportation. However, it is permissible to affix a certification statement on the shipping paper or separate sheet instead of using this form. The statement should read: "This is to certify that the cargo inside this unit (vehicle or container no.____) has been properly packed and secured, and that all applicable transport requirements have been met in accordance with the provisions of 12.3.7 (container) or 17.7.7 (vehicle), as applicable, of the general introduction to the International Maritime Dangerous Goods (IMDG) code." The form shall be originated, signed and dated by the individual responsible for packing the container or vehicle.

3-3.5. OPERATOR'S INSPECTION GUIDE AND TROUBLE REPORT, NAVFAC 9-11240/13. NAVFAC 9-11240/13 (figure 3-7) is a motor vehicle operator's inspection report used to report before and after operation inspections. NAVFAC 9-11240/13 may also be used in lieu of DD Form 626 when transporting small quantities of small arms ammunition (1.4S) for short distances off-station between the ammunition issue point and the range in support of training exercises. Under these circumstances, the motor vehicle inspections normally performed by certified motor vehicle inspector personnel at points of origin and destination may be waived. Note that this special authorization does not relieve the station from exercising its responsibilities with the respect to packaging, marking, labeling and blocking and bracing requirements normally applicable to ammunition movements off-station. Station SOPs must include instructions that clearly indicate the operator's responsibilities with respect to the use of NAVFAC 9-11240/13.

3-3.6. MATERIAL INSPECTION AND RECEIVING REPORT, DD FORM 250. The Material Inspection and Receiving Report, DD Form 250 (figure 3-8) is used for shipment of material from vendor to government installation. It provides for recording of inspection results, establishment of accountability and initiation of payment to vendor.

3-3.7. INSPECTION REQUIREMENTS BY COMMODITY. Table 3-1 provides the revised Navy and Marine Corps inspection requirements for commercial and organic motor vehicles used to transport A&E off-station.

Table 3-1. Inspection of Commercial and Organic Vehicles

COMMODITY	INSPECTION FORM REQUIRED
Explosives Class/Division 1.1, 1.2, 1.3	DD Form 626
Poisons	DD Form 626
Explosive Class/Division 1.4 Placarded Vehicles or Explosive 1.4 Shipments Weighing 1001 lbs. or 454 Kg or more	DD Form 626
Organic Truck Movements of Explosive 1.4 Shipments Weighing less than 1001 lbs. or 454 Kg	NAVFAC Form 9-11240/13 (in NAVFAC P-300) or DD Form 626
Commercial Truck Movements of Explosive 1.4 Shipments Weighing less than 1001 lbs. or 454 Kg	Carrier/Driver Pre- and Post-Trip Inspection Form per 49 CFR, Part 396.11

*See paragraphs 3-3.3 and 3-3.5 for instruction concerning motor vehicle inspection requirements for the transport of small arms ammunition (1.4S) for short distances off-station between ammunition issue points and ranges in support of training exercises.

CLICK HERE TO REPRODUCE AND ANNOTATE THIS FORM

VEHICLE AND EQUIPMENT OPERATIONAL RECORD
(ADMINISTRATIVE AND TACTICAL MOTOR VEHICLES) (11240)

DATE	TYPE	REGISTRATION NO.	ADMINISTRATION NO. 1	2	3

DISPATCHING ORGANIZATION	ACTION	TIME	MILES	TOTAL (Fuel gallons) 1	2	3	TOTAL (Oil quarts) 1	2	3

1ST OPERATOR	IN			REPORT TO
	OUT			
OPERATOR'S SIGNATURE	TOTAL			DISPATCHER'S SIGNATURE
2D OPERATOR	IN			REPORT TO
	OUT			
OPERATOR'S SIGNATURE	TOTAL			DISPATCHER'S SIGNATURE
3D OPERATOR	IN			REPORT TO
	OUT			
OPERATOR'S SIGNATURE	TOTAL			DISPATCHER'S SIGNATURE

DESTINATION a	TIME ARRIVE b	TIME DEPART c	ARRIVAL MILEAGE d	CARGO CUBE OR WEIGHT e	NO. PASSEN-GERS f	USER SIGNATURE g
FROM						
TO 1.						
TO 2.						
TO 3.						
TO 4.						
TO 5.						
TO 6.						
TO 7.						
TO 8.						
TO 9.						

DATE	TYPE	REGISTRATION NO.	ADMINISTRATION NO. 1	2	3

1. BEFORE OPERATION	OPERATOR 1st	2d	3d	2. DURING OPERATION	OPERATO 1st	2d	3d	AFTER OPERATION	OPERATOR 1st	2d	3d
DAMAGE, PILFERAGE				PARKING BRAKES				LIGHTS AND REFLECTORS			
LEAKS, GENERAL				SERVICE BRAKES				SAFETY DEVICES			
FUEL, OIL, WATER				CLUTCH				BRAKES			
ENGINE, WARM-UP				STEERING				AIR TANKS (DRAIN)			
INSTRUMENTS				ENGINE OPERATION				FUEL, OIL, WATER (Refill)			
SAFETY DEVICES				UNUSUAL NOISES				CLEAN (AS REQUIRED)			
TOOLS AND EQUIPMENT				INSTRUMENTS							

S = SATISFACTORY NA = NOT APPLICABLE X = DEFECTIVE

NAVMC 10627 (REV.11-94) (EF) (PREVIOUS EDITION WILL BE USED.)
SN: 0109-LF-063-9900

FIGURE 3-5. Vehicle and Equipment Operational Record, NAVMC 10627

CLICK HERE TO REPRODUCE AND ANNOTATE THIS FORM

CONTAINER PACKING CERTIFICATE
OR
VEHICLE PACKING DECLARATION

Person responsible for packing the cargo transport unit (vehicle/container) will complete the checklist. Cross out "vehicle" or "container", as applicable. After completion, sign the certificate.

1. It is declared that the undersigned has visually inspected (Container/Vehicle) Number: _____ (cross out whichever item does NOT apply) and it has been loaded/packed in accordance with the provisions of 5.4.2.1 (IMDGC) and CFR 49 and that (indicate "N/A" for all items that do NOT apply):

	a. The cargo transport unit (container/vehicle) was clean, dry, and apparently fit to receive the goods.
	b. If the consignment includes goods of class 1, other than 1.4, the cargo transport unit (container/vehicle) is structurally serviceable in conformity with 7.4.6 (IMDGC).
	c. Goods that should be segregated, have not been packed together onto or in the cargo transport unit (container/ vehicle) (unless approved by the competent authority concerned in accordance with 7.2.2.3 (IMDGC)).
	d. All packages have been externally inspected for damage, leakage, or sifting, and only sound packages have been packed.
	e. Drums have been stowed in an upright position, unless otherwise authorized by the competent authority.
	f. All packages have been properly packed onto or in the cargo transport unit (container/vehicle) and secured.
	g. When dangerous goods are transported in bulk packagings, the cargo has been evenly distributed.
	h. The cargo transport unit (container/vehicle) and packagings therein are properly marked, labeled, and placarded.
	i. When solid carbon dioxide (CO^2 - dry ice) is used for cooling purposes, the cargo transport unit (container/vehicle) is externally marked or labeled in a conspicuous place, such as the door, and with the words: "**DANGEROUS CO^2- GAS (DRY ICE) INSIDE. VENTILATE THOROUGHLY BEFORE ENTERING**".
	j. The dangerous goods transport document required in 5.4.1 (IMDGC) has been received for each dangerous goods consignment packed in the cargo transport unit (container/vehicle).
	k. If container is stowed with a vehicle and/or mechanical equipment with fuel in the tank, a warning label has been affixed to access doors legibly reading: "**WARNING - MAY CONTAIN EXPLOSIVE MIXTURES WITH AIR - KEEP IGNITION SOURCES AWAY WHEN OPENING**" in accordance with §176.905(a)(5), 49 CFR.

2. PERSON RESPONSIBLE FOR PACKING

a. PRINTED NAME *(Last, First, Middle Initial)*	b. RANK/GRADE	c. TITLE	d. ORGANIZATION

e. PLACE PACKED	f. SIGNATURE	g. DATE *(YYYYMMDD)*

DD FORM 2781, JUN 2005 PREVIOUS EDITION IS OBSOLETE.

FIGURE 3-6. Container Packing Certificate or Vehicle Packing Declaration, DD Form 2781

CLICK HERE TO REPRODUCE AND ANNOTATE THIS FORM

OPERATOR'S INSPECTION GUIDE AND TROUBLE REPORT			
Registration No.		Odometer Reading	
Use this registration form as a guide when performing before and after operation inspections. Check (☑) items that require servicing by maintenance personnel.			
	1. DAMAGE (Exterior/Interior/Missing Components)		
	2. LEAKS (Oil, Gas, Water)		
	3. TIRES (Check inflation, abnormal wear)		
	4. FUEL, OIL, WATER SUPPLY (Anti-freeze in season)		
	5. BATTERY (Check water level, cables, etc.)		
	6. HORN		
	7. LIGHTS/REFLECTORS/MIRRORS/TURN SIGNALS		
	8. INSTRUMENTS (Oil, Air, Temperature, etc.)		
	9. WINDSHIELD WIPER		
	10. CLEAN WINDSHIELD/VEHICLE INTERIOR		
	11. CARGO, MOUNTED EQUIPMENT		
	12. STEERING		
	13. SAFETY DEVICES (Seat belts, flares, etc.)		
	14. DRIVE BELTS/PULLEYS		
	15. BRAKES (Drain air tank when equipped)		
	16. OTHER (Specify in "Remarks")		
DATE		OPERATOR'S SIGNATURE	
REMARKS			

NAVFAC 9-11240/13 (12-69)
Supersedes DD Form 1358
S/N 0105-LF-004-1195

U. S. GPO: 1989-627-001/80143

FIGURE 3-7. Operator's Inspection Guide and Trouble Report, NAVFAC 9-11240/13

CLICK HERE TO REPRODUCE AND ANNOTATE THIS FORM

MATERIAL INSPECTION AND RECEIVING REPORT

Form Approved
OMB No. 0704-0248

The public reporting burden for this collection of information is estimated to average 30 minutes per response, including the time for reviewing instructions, searching existing data sources, gathering and maintaining the data needed, and completing and reviewing the collection of information. Send comments regarding this burden estimate or any other aspect of this collection of information, including suggestions for reducing the burden, to Department of Defense, Washington Headquarters Services, Directorate for Information Operations and Reports (0704-0248), 1215 Jefferson Davis Highway, Suite 1204, Arlington, VA 22202-4302. Respondents should be aware that notwithstanding any other provision of law, no person shall be subject to any penalty for failing to comply with a collection of information if it does not display a currently valid OMB control number.

PLEASE DO NOT RETURN YOUR COMPLETED FORM TO EITHER OF THESE ADDRESSES.
SEND THIS FORM IN ACCORDANCE WITH THE INSTRUCTIONS CONTAINED IN THE DFARS, APPENDIX F-401.

1. PROCUREMENT INSTRUMENT IDENTIFICATION (CONTRACT) NO.	ORDER NO.	6. INVOICE NO./DATE	7. PAGE	OF	8. ACCEPTANCE POINT

2. SHIPMENT NO.	3. DATE SHIPPED	4. B/L TCN	5. DISCOUNT TERMS

9. PRIME CONTRACTOR	CODE	10. ADMINISTERED BY	CODE

11. SHIPPED FROM *(If other than 9)*	CODE	FOB:	12. PAYMENT WILL BE MADE BY	CODE

13. SHIPPED TO	CODE	14. MARKED FOR	CODE

15. ITEM NO.	16. STOCK/PART NO. DESCRIPTION *(Indicate number of shipping containers - type of container - container number.)*	17. QUANTITY SHIP/REC'D*	18. UNIT	19. UNIT PRICE	20. AMOUNT
					0
					0.00
					0.00
					0.00
					0.00
					0.00
					0.00
					0.00

21. CONTRACT QUALITY ASSURANCE

a. ORIGIN

☐ CQA ☐ ACCEPTANCE of listed items has been made by me or under my supervision and they conform to contract, except as noted herein or on supporting documents.

DATE | SIGNATURE OF AUTHORIZED GOVERNMENT REPRESENTATIVE

TYPED NAME:

TITLE:

MAILING ADDRESS:

COMMERCIAL TELEPHONE NUMBER:

b. DESTINATION

☐ CQA ☐ ACCEPTANCE of listed items has been made by me or under my supervision and they conform to contract, except as noted herein or on supporting documents.

DATE | SIGNATURE OF AUTHORIZED GOVERNMENT REPRESENTATIVE

TYPED NAME:

TITLE:

MAILING ADDRESS:

COMMERCIAL TELEPHONE NUMBER:

22. RECEIVER'S USE

Quantities shown in column 17 were received in apparent good condition except as noted.

DATE RECEIVED | SIGNATURE OF AUTHORIZED GOVERNMENT REPRESENTATIVE

TYPED NAME:

TITLE:

MAILING ADDRESS:

COMMERCIAL TELEPHONE NUMBER:

** If quantity received by the Government is the same as quantity shipped, indicate by (X) mark; if different, enter actual quantity received below quantity shipped and encircle.*

23. CONTRACTOR USE ONLY

DD FORM 250, AUG 2000 PREVIOUS EDITION IS OBSOLETE.

FIGURE 3-8. Material Inspection and Receiving Report, DD Form 250

3-3.8. RAILROAD CAR CERTIFICATE. Deleted during Rev 6. Moved to NAVSEA SW023-AK-SAF-010.

3-3.9. RAILROAD CAR INSPECTION REPORT, NAVSEA 8023/3. Deleted during Rev 6. Moved to NAVSEA SW023-AK-SAF-010.

3-4. SHIPPING PAPERS.

Motor vehicles transporting AA&E must have shipping papers containing the pertinent data for each type of AA&E being transported. The shipping papers may include the Government Bill of Lading (GBL), SF 1103 or Commercial Bill of Lading (BL); Signature and Tally Record, DD 1907; Motor Equipment Utilization Record, DD Form 1970; Material Inspection and Receiving Report, DD Form 250; Issue Release/Receipt Document, DD Form 1348-1A; Motor Vehicle Inspection Report (Transporting Hazardous Materials), DD Form 626; and the Dangerous Goods Shipping Paper/ Declaration and Emergency Response Information for Hazardous Materials Transported by Government Vehicles, DD Form 836 (for organic Navy/Marine Corps owned vehicles). If applicable, a copy of the DOT Special Permit, Certificate of Equivalency or Interim Hazard Classification shall also accompany the shipping papers.

NOTE

Each motor vehicle loaded with explosives Class/Division 1.1 through 1.4 A&E must have duplicate copies of all shipping papers given to the driver with the exception of Signature and Tally Record (STR), DD Form 1907. The duplicate shipping papers shall be placed in a waterproof envelope marked “shipping papers.” For flatbed loads, the envelope shall be nailed to the floor of the trailer at the rear end of the load in a readily accessible location. For closed vans or dromedaries, the envelope may be nailed to the floor, taped to the inside of the door, or placed in a document holder, if one is present on the outside of the door.

The following information must be annotated on the shipping papers in accordance with the guidance provided in 49 CFR 172.202 thru 172.204 and DTR 4500.9-R. (See NAVSEA SW020-AG-SAF-010 for further guidance):

a. Proper shipping name.

b. Explosive hazard class/division.

c. UN serial number.

d. The packing group in roman numerals, if one has been assigned.

e. The total round quantity and piece count for each item being shipped.

f. Indicate the number and type or kind of packages on the bill of lading. For example: "6 Pallets (PLT), 2 Skids (SKD), 5 Containers (CNT), etc." Also, indicate the corresponding number of units

per each type or kind of package. For example: "6 pallets of 24 boxes per each pallet: or 2 skids of 8 pieces per each skid."

g. Technical and chemical names, if applicable, in parentheses following the proper shipping name [ex., “Flammable liquids, n.o.s. (contains Xylene and Benzene)”].

h. Special Permits. Shipments of items issued under a special permit must bear the notation “DOT-SP” followed by the special permit number. It must be located so that it is clearly associated with the description to which the special permit applies. It should be noted that some special permits may still show a "DOT-E" number.

i. Limited quantities. The description for a material offered for transportation as “limited quantity,” must include the words “Limited Quantity” or “Ltd Qty” following the basic description.

j. The MIL-STD, WR slash sheet, or other approved procedure used in loading the conveyance shall be annotated.

k. The requirement for use of a tarpaulin shall be annotated on the BL.

l. Seal number(s) shall be annotated on the BL.

FIGURE 3-9. Railroad Car Certificate. Deleted during Rev 6. Moved to NAVSEA SW023-AK-SAF-010

FIGURE 3-10. Railroad Car Inspection Report, NAVSEA Form 8023/3. Deleted during Rev 6. Moved to NAVSEA SW023-AK-SAF-010

3-4.1. BILL OF LADING. A Bill of Lading (BL) is the primary document used to procure freight transportation and related services from commercial carriers, including freight forwarders. For A&E shipments, the BL must contain a description of the hazardous material to include the proper shipping name, the item hazard class and division, the hazardous material identification number (UN number), the packing group, the net explosive weight of the material, the DOT Special Permit number (when applicable), emergency response instructions, and a shipper's hazardous material certification statement. See 49 CFR 172.200 thru 172.204 for detailed instructions. In addition, the BL must include a description of the DOD mandated Transportation Protective Services (TPS) per DTR 4500.9-R, Chapter 205 (see also Chapter 8 of NAVSEA SW020-AG-SAF-010). The two types of BLs used for DOD cargo shipments are the Government Bill of Lading (GBL) and the Commercial Bill of Lading (CBL).

3-4.1.1. GBL. The GBL, SF Form 1103, (figure 3-11A), is to be used for international freight/cargo shipments only. The pre-numbered forms are issued by the DOD. The SF 1103 will be used for a shipment into a foreign country that does not recognize DOD cargo that is documented on a CBL, or that requires a GBL for verification of DOD cargo. When appropriate, under certain shipping conditions, GBLs may be used for Foreign Military Sales (FMS) and Grant Aid shipments. Consult DTR 4500.9-R, Chapter 206, for information on GBL applications, accountability, and for instructions on how to obtain copies of SF 1103 and SF 1109 (continuation sheet). Consult DTR 4500.9-R, Appendix G and Attachment G2 for GBL electronic data interchange (EDI) preparation and data requirements.

3-4.1.2. CBL. The CBL, (figure 3-11B), can be used for any freight/cargo shipment, regardless of quantity, size, valuation, and weight. CBL applications and accountability are addressed in DTR 4500.9-R, Chapter 206. To date, no standard format has been assigned for the CBL. Consult DTR 4500.9-R, Appendix G and Attachment G4 for instructions on CBL preparation and data requirements in an electronic operating environment. A CBL can also be used for FMS and Grant Aid movements in accordance with DTR 4500.9-R, Chapter 206 and Appendix E instructions.

3-4.2. SIGNATURE AND TALLY RECORD (STR) DD FORM 1907. DD Form 1907 (figure 3-12) must accompany every shipment of classified or protected material accorded a TPS by commercial or military carriers. The STR is designed to provide continuous accountability and custody of a shipment from point of origin to delivery. Explosives drivers must sign the form at point of origin; the DD Form 1907 must have two valid signatures prior to shipment departure. Origin shipping inspectors shall verify that the driver has possession of the DD Form 1907 prior to releasing the shipment. Explosives drivers are required to obtain all necessary signatures en route; each person responsible for the proper handling of the shipment throughout transit must sign the DD Form 1907 at the time they assume responsibility. The explosives driver shall surrender the STR to the consignee upon delivery. The consignee is not required to return a copy of the DD Form 1907 to the shipper.

NOTE

Although the STR is not a TPS as defined in NAVSEA SW020-AG-SAF-010, it may be requested by transportation officers to maintain accountability of shipments that are not required to move under a TPS.

NOTE

A thorough investigation into Navy and Marine Corps sensitive AA&E considered to be missing, lost or stolen, or any inventory or accountability losses of such AA&E, shall be conducted per the provisions of OPNAVINST 5530.13 (series) and the reporting criteria of OPNAVINST 3100.6 (series).

3-4.3. ISSUE RELEASE/RECEIPT DOCUMENT, FORM 1348-1A. This form (shown in figure 3-13) serves as a release document from distribution point to consignee, for retrograde material, for interstation movement of AA&E, and as a receipt document for the consignee. This document may be included as one of the shipping papers an explosives driver will carry and present to the appropriate individual at the receiving activity. It shall contain freight classification nomenclature consisting of the UN proper shipping name, the UN hazard classification and division, UN identification number, and freight descriptions (motor or rail, as applicable).

3-4.4. DANGEROUS GOODS SHIPPING PAPER/DECLARATION AND EMERGENCY RESPONSE INFORMATION FOR HAZARDOUS MATERIALS TRANSPORTED BY GOVERNMENT VEHICLES, DD FORM 836. DD Form 836 (figure 3-14) is originated by the shipping activity and is used to provide emergency response instructions for all CONUS movements of A&E by government vehicles. The information on this form is specifically applicable to the cargo being transported, and provides safety precautions and emergency measures to be exercised in the event of an accident, incident, breakdown or fire. The appropriate North American Emergency Response Guidebook (ERG) guidesheet must be attached to the DD Form 836. The origin government or military driver must keep the DD Form 836 in the vehicle at all times while in-transit, and must transfer it to each successive driver for delivery to the consignee. When a Security Escort Vehicle (SEV) service is used, personnel performing the service will be provided with a duplicate copy of the DD Form 836.

NOTE

When a wire twist is applied to the doors of a motor vehicle loaded with AA&E, the "Remarks" block of the DD Form 836 shall be annotated to read "Wire twist applied to doors. Do not use explosive-actuated, flame- or heat-producing cutters to remove". The "Remarks" block should also read "In case of accident or breakdown, post reflective triangles to warn traffic in each direction".

3-4.5. SEALS NOTICES AND TAGS. A Seal Notice, NAVSUP Form 407, (figure 3-15) shall be attached only by the shipping activity near the cargo opening of any vehicle transporting Security Risk Category (SRC) I, II and SECRET material. This notice tells the carrier what procedures must be followed if it is necessary to break the seals to gain access to the cargo compartment. When a shipment contains classified material, a seal tag containing special instructions for breaking seals shall be attached to the seal. The tag (figure 3-16), is encased in or protected by a transparent, waterproof material containing an eyelet through which the metal band of the seal will be threaded before the seal is attached to the load.

CLICK HERE TO REPRODUCE AND ANNOTATE THIS FORM

U.S. GOVERNMENT BILL OF LADING
INTERNATIONAL AND DOMESTIC OVERSEAS SHIPMENTS

B/L NUMBER

TRANSPORTATION COMPANY TENDERED TO | SCAC | DATE B/L PREPARED

DESTINATION NAME AND ADDRESS | SPLC *(Dest.)* | SPLC *(Orig.)* | ORIGIN NAME AND ADDRESS

CONSIGNEE *(Name and full address of installation)* | GBLOC *(Cons.)* | SHIPPER NAME AND ADDRESS

APPROPRIATION CHARGEABLE | BILL CHARGES TO *(Dept./agency, bureau/office mailing address and ZIP code)* | AGENCY LOC CODE

VIA *(Route shipment when advantageous to the Government)*

MARKS AND ANNOTATIONS

PACKAGES NO.	PACKAGES KIND	HM	DESCRIPTION OF ARTICLES *(Use carrier's classification or tariff description if possible; otherwise use a clear nontechnical description.)*	19. WEIGHTS* *(Pounds only)*	FOR USE OF BILLING CARRIER ONLY Services	Rate	Charges
			CLASSIFICATION ITEM NO.		TOTAL CHARGES		

TARIFF/SPECIAL RATE AUTHORITY | CARRIER WAY/FREIGHT BILL NO. AND DATE

STOP THIS SHIPMENT AT

FOR

CARRIER'S PICKUP DATE *(Year, month, and day)*

FURNISH INFORMATION ON CAR/TRUCKLOAD/CONTAINER SHIPMENTS

SEAL NUMBERS	LENGTH/CUBE ORDERED	LENGTH/CUBE FURNISHED	MARKED CAPACITY ORDERED	MARKED CAPACITY FURNISHED	DATE FURNISHED
APPLIED BY:					

MODE	ESTIMATE	NO. OF CLS/TLS	TYPE RATE	PSC	REASON

This U.S. Government shipment is subject to terms and conditions of 41 CFR 102-117 and CFR 102-118.

CERTIFICATE OF CARRIER BILLING -- CONSIGNEE MUST NOT PAY ANY CHARGES

DELIVERED ON *(Year, month, and day)*

FOR USE OF ISSUING OFFICE

ISSUING OFFICE *(Name and complete address)* | GBLOC | ISSUING OFFICER

CONTRACT/PURCHASE ORDER NO. OR OTHER AUTHORITY | DATED

FOB POINT NAMED IN CONTRACT

*Show also cubic measurements for shipments via air, truck or water carrier in cases where required.

AUTHORIZED FOR LOCAL REPRODUCTION

STANDARD FORM 1103 (REV. 9/2003)
Prescribed by GSA/FMR 102-118

FIGURE 3-11A. U.S. Government Bill of Lading, SF 1103

COMMERCIAL BILL OF LADING

DATE | ORIGINAL | B/L NO. >

CARRIER | SCAC | CARRIER ACCOUNT NO.

DESTINATION (Name, address and ZIP code) | SPLC (Dest.)

ORIGIN (Name, address and ZIP code) | SPLC (Orig.)

CONSIGNEE (Name, address and ZIP code of installation)

SHIPPER (Name, address and ZIP code)

APPROPRIATION CHARGEABLE

BILL CHARGES TO (Dept/agency, bureau/office mailing address and ZIP code)

VIA (Route shipment when advantageous to the Government)

MARKS AND ANNOTATIONS

TOTAL PKGS. NO	KIND	HM	DESCRIPTION OF ARTICLES (Use carrier's classification or tariff description if possible; otherwise use clear nontechnical description)	QUANTITY * (Pounds, Gallons or Barrels)	FOR USE OF BILLING CARRIER ONLY Services	Rate	Charges
			CLASSIFICATION ITEM NO				
					TOTAL CHARGES		

TARIFF/SPECIAL RATE AUTHORITY | PICKUP SERVICE FURNISHED ☐ VEHICLE FULLY LOADED ☐ | SHIPPERS INITIALS | ROUTE ORDER/RELEASE NUMBER

STOP SHIPMENT AT

FOR

FURNISH INFORMATION ON CAR/TRUCKLOAD/CONTAINER SHIPMENTS

INITIALS & NO.	SEAL NUMBERS	LENGTH/CUBE ORDERED	LENGTH/CUBE FURNISHED	MARKED CAPACITY ORDERED	MARKED CAPACITY FURNISHED	DATE
	APPLIED BY SH					2004-05-05

CARRIER'S PICKUP DATE | SIGNATURE OF AGENT | PER | CARRIER WAY/FREIGHT BILL NO. AND DATE

MODE	ESTIMATE	NO CLS/TLS	TYPE RATE	PSC	REASON	DELIVERED ON DATE	AT (Actual delivery point)

ISSUING OFFICER AND OFFICE (Issuing officer name, office and complete address)

BY (Name of the delivering carrier)

GBLOC

DELIVERED THIS CONSIGNMENT COMPLETE & IN APPARENT GOOD ORDER EXCEPT AS MAY BE INDICATED SHORTAGE ☐ DAMAGED ☐

☐ CARRIER OS&D REPORT ATTACHED

☐ DELIVERY AT DESTINATION FURNISHED

☐ ACCESSORIAL SERVICES CERTIFICATION ATTACHED

NAME OF BILLING CARRIER

CONTRACT/PURCHASE ORDER NO. AND FOB POINT | DATED

SIGNATURE OF AGENT

THIS IS TO CERTIFY THAT HERE-IN NAMED MATERIALS ARE PROPERLY CLASSIFIED, DESCRIBED, PACKAGED, MARKED, AND LABELED, AND ARE IN PROPER CONDITION FOR TRANSPORTATION ACCORDING TO THE APPLICABLE REGULATIONS OF THE DEPARTMENT OF TRANSPORTATION. SUBJECT TO SECTION 7 OF THE CONDITIONS, IF THIS SHIPMENT IS TO BE DELIVERED TO THE CONSIGNEE WITHOUT RECOURSE ON THE CONSIGNOR, THE CONSIGNOR SHALL SIGN THE FOLLOWING STATEMENT: THE CARRIER SHALL NOT MAKE DELIVERY OF THIS SHIPMENT WITHOUT PAYMENT OF FREIGHT AND ALL OTHER LAWFUL CHARGES.

RECEIVED, SUBJECT TO THE TENDERS AND RULES IN EFFECT ON THE DATE OF THE ISSUE OF THIS BILL OF LADING, THE PROPERTY DESCRIBED ABOVE IN APPARENT GOOD ORDER, EXCEPT AS NOTED (CONTENTS AND CONDITIONS OF CONTENTS OF PACKAGES UNKNOWN), MARKED, CONSIGNED, AND DESTINED AS INDICATED ABOVEWHICH SAID CARRIER (THE WORD CARRIER BEING UNDERSTOOD THROUGHOUT THIS CONTRACT AS MEANING ANY PERSON OR CORPORATION IN POSSESSION OF THE PROPERTY UNDER THE CONTRACT) AGREES TO CARRY TO ITS USUAL PLACE OF DELIVERY AT SAID DESTINATION, IF ON ITS ROUTE, OTHERWISE TO DELIVER TO ANOTHER CARRIER ON THE ROUTE TO SAID DESTINATION. IT IS MUTUALLY AGREED AS TO EACH CARRIER OF ALL OR ANY OF , SAID PROPERTY OVER ALL OR ANY PORTION OF THE SAID ROUTE TO DESTINATION AND AS TO EACH PARTY AT ANY TIME INTERESTED IN ALL OR ANY SAID PROPERTY, THAT EVERY SERVICE BE PERFORMED HERE UNDER SHALL BE SUBJECT TO ALL THE BILL OF LADING TERM AND CONDITIONS IN THE GOVERNING CLASSIFICATION ON THE DATE OF THE SHIPMENT. SHIPPER HEREBY CERTIFIES THAT HE IS FAMILIAR WITH ALL THE BILL OF LADING TERMS AND CONDITIONS IN THE GOVERNING CLASSIFICATION AND THE SAID TERMS AND CONDITIONS ARE HEREBY AGREED BY THE SHIPPER AND ACCEPTED FOR HIMSELF AND HIS ASSIGNS. NOTE - WHERE THE RATE IS DEPENDENT ON VALUE, SHIPPERS ARE REQUESTED TO STATE SPECIFICALLY IN WRITING THE AGREED OR DECLARED VALUE OF THE PROPERTY. THE AGREED OR DECLARED VALUE OF THE PROPERTY IS HEREBY SPECIFICALLY STATED BY THE SHIPPER TO BE NOT EXCEEDING :
$_____ PER_____ FREIGHT CHARGES PREPAID ☐ COLLECT ☐ FREIGHT PREPAID UNLESS COLLECT BOX IS CHECKED

FIGURE 3-11B. Sample Commercial Bill of Lading

CLICK HERE TO REPRODUCE AND ANNOTATE THIS FORM

SIGNATURE AND TALLY RECORD *(See DoD 4500.9-R for guidance)* *(Use of equivalent carrier-furnished signature and tally record is acceptable.)*	*OMB No. 0702-0027* *OMB approval expires* *Oct 31, 2008*

The public reporting burden for this collection of information is estimated to average 3 minutes per response, including the time for reviewing instructions, searching existing data sources, gathering and maintaining the data needed, and completing and reviewing the collection of information. Send comments regarding this burden estimate or any other aspect of this collection of information, including suggestions for reducing the burden, to the Department of Defense, Executive Services Directorate (0702-0027). Respondents should be aware that notwithstanding any other provision of law, no person shall be subject to any penalty for failing to comply with a collection of information if it does not display a currently valid OMB control number.

PLEASE DO NOT RETURN YOUR FORM TO THE ABOVE ORGANIZATION. RETURN COMPLETED FORM AS DIRECTED IN THE DISTRIBUTION INSTRUCTIONS BELOW.

DISTRIBUTION INSTRUCTIONS

(1) The SHIPPER will print two copies, retain one copy and give one to the Origin Carrier.
(2) The ORIGIN CARRIER will deliver one copy with original signatures to the Destination Carrier.
(3) The DESTINATION CARRIER will attach one copy (reflecting all original signatures) and Standard Form 1113, Public Voucher for Transportation Charges, to the original Commercial Bill of Lading and forward for payment. Reproduced completed copy of DD Form 1907 will be delivered to the Consignee and one will be retained.
(4) The CONSIGNEE will ensure Destination Carrier surrenders a reproduced copy of completed form with all signatures.

SECTION I - TO BE COMPLETED BY THE SHIPPER

1a. SHIPPER NAME	**b. ORIGIN**	
2. PROTECTIVE SERVICE REQUESTED	**3. COMMERCIAL BILL OF LADING NUMBER**	
4a. CONSIGNEE NAME	**b. DESTINATION**	
5. PERMIT NUMBER *(If any)*	**6. TRANSPORTATION CONTROL NUMBER**	
7. ROUTING	**8. WEIGHT**	**9. CUBE**
10. SPECIAL INSTRUCTIONS		**11. DATE SHIPMENT TENDERED TO CARRIER** *(YYYYMMDD)*
12. NAME OF CARRIER		**13. NUMBER OF PIECES**
14. TYPE OF PACKAGE(S) *(For unsealed loads only)* **OR CONVEYANCE IDENTIFICATION AND SEAL NUMBERS** *(For sealed loads only)*	**15. FREIGHT CLASSIFICATION DESCRIPTION**	

SECTION II - TO BE COMPLETED BY EACH PERSON ACCEPTING CUSTODY OF CLASSIFIED OR PROTECTED MATERIAL REQUIRING THE USE OF TRANSPORTATION PROTECTIVE SERVICE DURING TRANSIT

16. CUSTODY RECORD

PRINT NAME OF PERSON AND COMPANY REPRESENTED a.	STATION INTERCHANGE POINT DESTINATION b.	SIGNATURE OF PERSON ACCEPTING CUSTODY c.	TIME ACCEPTED d.	DATE ACCEPTED *(YYYYMMDD)* e.

DD FORM 1907, NOV 2006 PREVIOUS EDITION IS OBSOLETE.

FIGURE 3-12. Signature and Tally Record, DD Form 1907 (Sheet 1 of 2)

CLICK HERE TO REPRODUCE AND ANNOTATE THIS FORM

16. CUSTODY RECORD *(Continued)*				
PRINT NAME OF PERSON AND COMPANY REPRESENTED a.	STATION INTERCHANGE POINT DESTINATION b.	SIGNATURE OF PERSON ACCEPTING CUSTODY c.	TIME ACCEPTED d.	DATE ACCEPTED *(YYYYMMDD)* e.

FIGURE 3-12. Signature and Tally Record, DD Form 1907 (Sheet 2 of 2)

DD FORM 1348-1A, JUL 91 (EG) ISSUE RELEASE/RECEIPT DOCUMENT

1 2 3 4 5 6 7 23 24 25 26 27 28 29 45 46 47 48 49 50 51 52 53 54 55 56 57 58 59 60 61 62 63 64 65 66 67 68 69 70 71 72 73 74 75 76 77 78 79 80

DOCUMENT	RI FROM	M&S	UNIT	QUANTITY	SER	SUPPLEMENTARY ADDRESS	SIG	FUND	DISTRIBUTION	PROJECT	PRI	REQD	DELTE	ADV	RI	O/P	CONDM	MGT

UNIT PRICE		DOLLARS	CTS
DOLLARS	CTS		

1. TOTAL PRICE	2. SHIP FROM	3. SHIP TO
	4. MARK FOR	

5. DOC DATE	6. NMFC	7. FRT RATE	8. TYPE CARGO	9. PS

10. QTY. REC'D	11.UP	12. UNIT WEIGHT	13. UNIT CUBE	14. UFC	15. SL

16. FREIGHT CLASSIFICATION NOMENCLATURE

17. ITEM NOMENCLATURE

18. TY CONT	19. NO CONT	20. TOTAL WEIGHT	21. TOTAL CUBE

22. RECEIVED BY	23. DATE RECEIVED

24. DOCUMENT NUMBER & SUFFIX (30-44)

25. NATIONAL STOCK NO. & ADD (8-22)

26. RIC (4-6)
UI (23-24)
QTY (25-29)
CON CODE (71)
DIST (55-56)
UP (74-80)

27. ADDITIONAL DATA

PREVIOUS EDITION MAY BE USED

PerFORM (DLA)

FIGURE 3-13. Issue Release/Receipt Document, DD Form 1348-1A

CLICK HERE TO REPRODUCE AND ANNOTATE THIS FORM

HAZMAT // HAZMAT // HAZMAT // HAZMAT // HAZMAT // HAZMAT

DANGEROUS GOODS SHIPPING PAPER/DECLARATION AND EMERGENCY RESPONSE INFORMATION FOR HAZARDOUS MATERIALS TRANSPORTED BY GOVERNMENT VEHICLES

1.a. NOMENCLATURE:
b. MODEL NO.:
c. BUMPER NO.:
d. CONTAINER SEAL NO.:
e. SERIAL NO.:
f. TCN NUMBER:

2. SHIPPER NAME/ADDRESS/TELEPHONE NO./DATE OF PREPARATION

3. PAGE ____ OF ____ PAGES

4. CARGO *(To be completed by the unit or shipper Transportation Office (TO))*

UN/ID NUMBER a.	PROPER SHIPPING NAME *(Include RQ, Technical Names, Additional Information per 49 CFR172.203, as required.)* b.	HAZARD CLASS/ DIVISION c.	SUBSIDIARY HAZARD d.	PACKING GROUP (PG) e.	PACKAGES NUMBER f.	PACKAGES KIND g.	TOTAL NET QUANTITY h.	TOTAL AMMO (NEW) i.

5. CONSIGNEE NAME

6. REMARKS

7.a. COPY OF EMERGENCY RESPONSE GUIDE NUMBER(S)

b. EMERGENCY NOTIFICATION. In all cases of accident, breakdown or fire, promptly call emergency assistance telephone number(s) in Item 7c below and then shipper and/or consignee in Item 2 above, in that order.

c. 24-HOUR EMERGENCY ASSISTANCE TELEPHONE NUMBERS:

DOD NON-EXPLOSIVE HAZMAT:	DOD HAZ CLASS 1 (EXPLOSIVES) ONLY:	CHEMICAL/BIOLOGICAL WARFARE MATERIAL DUTY HOURS:	SECURE HOLDING:	DOD RADIOACTIVE MATERIALS:
1-800-851-8061 AT SEA: COLLECT: **1-804-279-3131**	**(703) 697-0218 or 0219** (COLLECT) OR **DSN 227-0218** (WATCH OFFICER)	**DSN 584-3044, 584-7211, 584-6455,** **Comm. (410) 436-3044, (410) 436-7211, (410) 436-6455** AFTER DUTY HOURS: **DSN 584-2148,** **Comm. (410) 436-2148** (Ask for TEU S3)	Non-AA&E: **1-800-524-0331** AA&E: **1-800-826-0794** OIL AND CHEMICAL SPILLS: NATIONAL RESPONSE CENTER (NRC) AND TERRORIST HOTLINE: **1-800-424-8802** AT SEA: **202-267-2675** (COLLECT)	ARMY: **(703) 697-0218** (COLLECT) USAF: **(202) 767-4011** (COLLECT) USN/MC: Use 24-hour emergency response phone number provided by USN/MC activity initiating shipment. DLA: **1-800-851-8061** (AT SEA: **(804) 279-3131**)

8. SHIPPER'S CERTIFICATION
This is to certify that the above named materials are properly classified, described, packaged, marked and labeled, and are in proper condition for transportation according to the regulations of the Department of Transportation.

a. TYPE OR PRINT NAME OF SHIPPER CERTIFIER

b. SIGNATURE OF SHIPPER CERTIFIER AND DATE

c. SIGNATURE(S) OF VEHICLE OPERATOR(S)

DD FORM 836, DEC 2007 PREVIOUS EDITION IS OBSOLETE. Adobe Professional 7.0

HAZMAT // HAZMAT // HAZMAT // HAZMAT // HAZMAT // HAZMAT

FIGURE 3-14. Dangerous Goods Shipping Paper/Declaration and Emergency Response Information for Hazardous Materials Transported by Government Vehicles, DD Form 836 (Sheet 1 of 2)

CLICK HERE TO REPRODUCE AND ANNOTATE THIS FORM

HAZMAT INST // HAZMAT INST // HAZMAT INST // HAZMAT INST

INSTRUCTIONS FOR COMPLETING DD FORM 836, DANGEROUS GOODS SHIPPING PAPER/DECLARATION AND EMERGENCY RESPONSE INFORMATION FOR HAZARDOUS MATERIALS TRANSPORTED BY GOVERNMENT VEHICLES

GENERAL

DD Form 836 will be completed by a qualified* individual from a transportation office, unit or other organization offering Hazardous Material (HAZMAT) for transportation in areas accessible to the general public.

*An individual is considered qualified to complete and sign (certify) DD Form 836, only after having satisfactorily completed either a DOD authorized HAZMAT Course from one of the DOD-approved schools listed in the Defense Transportation Regulation (DTR) or military technical specialist training in accordance with the DTR, Chapter 204, Paragraph D. This person will be appointed in writing by the activity or unit commander, to include scope of authority and expiration date of training.

Item 1. Fill in the nomenclature, model number, TCN, and bumper number/serial number of the vehicle/container. For containers carrying sensitive or classified items, the container security seal is required.

Item 2. Enter the shipper's address and telephone number of the HAZMAT origination and date of preparation. Telephone number is for NOTIFICATION PURPOSES ONLY. Emergency assistance will be obtained from the 24-HOUR EMERGENCY ASSISTANCE TELEPHONE NUMBER(S) in Item 7c. on the first page of this form.

Item 3. Self-explanatory.

Item 4a. Enter the identification numbers, e.g., NA, UN. The letters "UN" or "NA" must be noted. "NA" may not be used for OCONUS.

Item 4b. Enter the proper shipping name of the HAZMAT and if applicable include the technical name. (Enter additional information as required by 49 CFR, 172.203 - Example: RQ, Inhalation Hazard.) NOTE: In the case of multiple HAZMAT items on the same form with different emergency response telephone numbers, each phone number will be annotated below or adjacent to the HAZMAT item to which they apply.

Item 4c. Enter the Hazard class/division and, if applicable, the Compatibility Group.

Item 4d. Enter the subsidiary hazard of the material if applicable.

Item 4e. Enter the packing group (e.g. I, II, or III) of the HAZMAT.

Item 4f. Enter the total number of packages/items.

Item 4g. Enter the type of packaging (e.g., container, box, drum, pallet), the HAZMAT is packed in.

Item 4h. Enter the total net quantity for non-explosive material in metric measure. US measure may be added in parentheses underneath the metric measure. For ammunition, enter the total number of rounds/articles. Exception: Net total quantity is not required for bulk packages, empty packages, and cylinders of Class 2.

Item 4i. Enter total Net Explosive Weight (NEW) in kilograms for ammunition/ explosive (Class 1 items). NEW information is found in the Joint Hazard Classification System (JHCS) in the entry for the NEW (Transportation Quantity). Example: 27.231 kg.

Item 5. Enter the six digit Department of Defense Activity Address Codes (DODAAC) and/or the clear geographical location of the ultimate consignee of the HAZMAT shipment. If this is a unit move, the unit name will be the same as that for Item 2.) Additional information if needed can be annotated in Item 6.

Item 6. Additional handling instructions/information.

Item 7a. Enter Emergency Response Guide Number.

Item 7b. Self-explanatory. Call 24-hour Emergency Response number(s) circled in Item 7c first and then shipper.

Item 7c. Circle emergency response telephone number.
NOTE: For Radioactive Material Shipments only: Circle numbers and cross out those numbers that do not apply, e.g., Army shipments - cross out all but Army's radioactive response number.

Item 8. Certifying person must type or print name legibly in 8a. and must sign in writing (longhand) and add the date signed in 8b.

Item 8c. Self explanatory.

NOTES:

1. Units returning from firing range must have a certified or qualified person to ensure that all HAZMAT is properly repackaged and secured (i.e. braced, blocked, and tied down) prior to being transported back to base. See exception below.

2. Completion of a new DD Form 836 is not required. Original DD Form 836 may be used provided that:

a. Change Item 2 (Date Prepared).

b. Change Item 4. (Cargo):
(i) HAZMAT used will be deleted from form by crossing out or lining through.
(ii) HAZMAT that remains, but is in different quantities, will have the correct amounts entered in the section(s).

EXCEPTION:

c. Change Item 8b.:
(i) A qualified individual (if available) must sign in writing (longhand). If a qualified individual is not available, then the Officer-In-Charge (OIC) or Non-Commissioned Officer-In-Charge (NCOIC) must sign in writing (longhand) to verify that the above procedures have been performed for the return trip to base.
(ii) Cross out original signature if different certifier will be used.

DD FORM 836 (BACK), DEC 2007

HAZMAT INST // HAZMAT INST // HAZMAT INST // HAZMAT INST

FIGURE 3-14. Dangerous Goods Shipping Paper/Declaration and Emergency Response Information for Hazardous Materials Transported by Government Vehicles, DD Form 836 (Sheet 2 of 2)

CLICK HERE TO REPRODUCE AND ANNOTATE THIS FORM

NAVSUP FORM 407 (REV. 10-78)

NOTICE

The Doors of This Car or Vehicle are Sealed with NAVY SEALS. The Seals are Not to be Broken nor the Car or Vehicle Entered (except in an extreme emergency) Without Prior Approval of the (Insert name and telephone number of shipping activity)

GIVE ALL REFERENCES NOTED BELOW

REFERENCES			
	Car or Vehicle Initial & No. No 272/276B ICC 47142	B/L No.	Trans. Control No. (if any) R00164-4140-0200
	Consignor NWC China Lake, CA		Origin China Lake, CA
	Consignee NSWC Dahlgren, VA		Destination Dahlgren, VA

S/N 0108-LF-500-4070

FIGURE 3-15. Seal Notice, NAVSUP Form 407

SAMPLE

DO NOT BREAK THIS SEAL

SHIPPED UNDER DEPARTMENT OF TRANSPORTATION DOT SPECIAL PERMIT NO. SP-868, LATEST REVISION. IF SEALS MUST BE BROKEN FOR SAFETY REASONS, CARRIER WILL NOTIFY NEAREST ARMY, NAVY, AIR FORCE, OR REPRESENTATIVE BE PRESENT BEFORE SEALS ARE BROKEN. IF SAFETY REQUIRES SEALS BE BROKEN BEFORE REPRESENTATIVE COULD ARRIVE, CARRIER WILL BREAK SEALS, TAKE NECESSARY SAFETY ACTION, AND NOTIFY NEAREST INSTALLATION AT ONCE, TAKING EVERY PRECAUTION TO ENSURE SAFETY AND SECURITY OF LADING UNTIL ARRIVAL OF REPRESENTATIVE.

FIGURE 3-16. Waterproof Seal Tag Required for Classified Shipment

3-4.6. SHIPPER'S DECLARATION FOR DANGEROUS GOODS FORM. The Shipper's Declaration for Dangerous Goods Form (figure 3-17) is used on air shipments of A&E, biologicals, classified material, or any other material requiring special handling as determined by the shipping activity. This form, which replaces DD Form 1387-2 for certification purposes, is affixed to the other applicable shipping documents. It describes services to be used. It shall be completed per NAVSUP Pub 505 and DTR 4500.9-R.

3-4.7. DOD MULTIMODAL DANGEROUS GOODS DECLARATION, DD FORM 2890. DD Form 2890 is originated by the shipping activity and shall be used for shipments of A&E destined to OCONUS locations by vessel [military, commercial or Military Sealift Command (MSC)]. Shipments originating from an activity within CONUS, but destined to an OCONUS location, shall require a DD Form 2890 for both the highway and commercial vessel portions of the movement. Refer to NAVSEA SW020-AG-SAF-010 for further detail.

3-4.8. MEMORANDUM RECEIPT. A memorandum receipt is an informal shipping paper used as a bill of lading for on-station movement of A&E.

3-5. REPORTS OF INCIDENTS DURING TRANSIT.

Explosives drivers shall report incidents occurring en route, such as accidents, fire, breakdowns and security violations. Reports shall be prepared and processed as described in the following paragraphs.

3-5.1. MOTOR VEHICLE ACCIDENT REPORT, STANDARD FORM (SF) 91. Every accident involving a Navy vehicle shall be reported by the driver of the vehicle on the Motor Vehicle Accident Report, SF 91, (figure 3-18). Drivers are required to carry a copy of this form in the vehicle at all times. The driver shall accurately and completely record all of the facts concerning the accident, and ensure immediate delivery of the form to the proper authority per NAVSEA SW020-AG-SAF-010 and OPNAVINST 5102.1 (series). For assistance in the correct preparation of this report, drivers may refer to appendix C for a detailed breakdown of the required information. Specific instructions for drivers in the event of an accident are covered in paragraph 5-7.1.

3-5.1.1. Commercial carrier drivers shall refer to NAVSEAINST 8020.18 (series), "Transportation Emergency Response Involving DOD Conventional Munitions and Explosives," when reporting transportation accidents or incidents.

3-5.2. REQUIRED WRITTEN REPORTS OF DELAYS, BREAKDOWNS, OR DAMAGED CONTAINERS. Delays due to breakdowns shall be reported by the driver on DD Form 1970 or NAVMC 10627. The form shall be distributed as specified in paragraphs 3-3.1 or 3-3.3 respectively. Written reports for delays of specific duration are addressed in paragraph 5-10.2. Although no forms are provided for reporting delays caused by conditions other than breakdowns (i.e. damaged containers), explosives drivers shall promptly submit complete and accurate written reports in all cases.

SHIPPER'S DECLARATION FOR DANGEROUS GOODS **(Provide at least two copies to the airline.)**

Shipper	Air Waybill No. Page of Pages Shipper's Reference Number *(optional)*
Consignee	
Two completed and signed copies of this Declaration must be handed to the operator	**WARNING** **Failure to comply in all respects with the applicable Dangerous Goods Regulations may be in breach of the applicable law, subject to legal penalties. This Declaration must not, in any circumstances, be completed and/or signed by a consolidator, a forwarder or an IATA cargo agent.**
TRANSPORT DETAILS This shipment is within the limitations prescribed for *(delete non-applicable)* PASSENGER AND CARGO AIRCRAFT / CARGO AIRCRAFT ONLY Airport of Departure	
Airport of Destination	Shipment type *(delete non-applicable)* NON-RADIOACTIVE / RADIOACTIVE

NATURE AND QUANTITY OF DANGEROUS GOODS

Dangerous Goods Identification							
Proper Shipping Name	Class or Division	UN or ID No.	Packing Group	Subsidiary Risk	Quantity and type of packing	Packing Inst.	Authorization

Additional Handling Information

This shipment prepared according to: ☐ 49CFR ☐ IATA Regulations ☐ ICAO Regulations

I hereby declare that the contents of this consignment are fully and accurately described above by the proper shipping name, and are classified, packaged, marked and labelled/placarded, and are in all respects in proper condition for transport according to applicable international and national governmental regulations.	Name/Title of Signatory Place and Date Signature *(see warning above)*

SD-I DG SUPPLIES, INC. P.O. BOX 400 DAYTON, N.J. 08810 1 800 347-7879

FIGURE 3-17. Shipper's Declaration for Dangerous Goods

CLICK HERE TO REPRODUCE AND ANNOTATE THIS FORM

MOTOR VEHICLE ACCIDENT REPORT	Please read the Privacy Act Statement on Page 3	INSTRUCTIONS: Sections I thru IX are filled out by the vehicle operator. Section X, items 72 thru 82c are filled on by the operator's supervisor. Section XI thru XIII are filled out by an accident investigator for bodily injury, fatality, and/or damage exceeding $500.

SECTION I - FEDERAL VEHICLE DATA

1. DRIVER'S NAME (Last, first, middle)	2. DRIVER'S LICENSE NO./STATE/LIMITATIONS	DATE OF ACCIDENT
Doe John H.	AA0I812/Va.	

4a. DEPARTMENT/FEDERAL AGENCY PERMANENT OFFICE ADDRESS	4b. WORK TELEPHONE NUMBER
Department of the Navy, Naval Weapons Station site - Yorktown	(804) 887-0000

5. TAG OR IDENTIFICATION NUMBER	6. EST. REPAIR COST	7. YEAR OF VEHICLE	8. MAKE	9. MODEL	10. SEAT BELTS USED
N9645793	$ 3,500.00	1995	Ford	Truck 15T	[x] YES [ ] NO

11. DESCRIBE VEHICLE DAMAGE

Right front fender, front fender, front end

SECTION II - OTHER VEHICLE DATA *(Use Section VIII if additional space is needed)*

12. DRIVER'S NAME (Last, first, middle)	13. SOCIAL SECURITY NO./ TAX IDENTIFICATION NO.	14. DRIVER'S LICENSE NO./STATE/LIMITATIONS
Chambers Tom	000-00-0000	TC00000/Va.

15a. DRIVER'S WORK ADDRESS	15b. WORK TELEPHONE NUMBER
Naval Weapons Station Yorktown, Va.	(804) 887-0000
16a. DRIVER'S HOME ADDRESS	**16b. HOME TELEPHONE NUMBER**
700 Latham Drive Newport News, Va.	(804)887-0000
17. DESCRIPTION OF VEHICLE DAMAGE	**18. ESTIMATED REPAIR COST**
Left front fender, driver door, gas tank, hood, roof, windows	$ 2,500.00

19. YEAR OF VEHICLE	20. MAKE OF VEHICLE	21. MODEL OF VEHICLE	22. TAG NUMBER AND STATE
1984	Buick	Station Wagon	XXXXXX/Va

23a. DRIVER'S INSURANCE COMPANY NAME AND ADDRESS	23b. POLICY NUMBER
Last Chance Insurance Company Newport News, Va.	1234567890123
	23c. TELEPHONE NUMBER
	(804) 887-0000

24. VEHICLE IS	25a.OWNER'S NAME(S) (Last, first, middle)	25b. TELEPHONE NUMBER
[ ] CO-OWNED [ ] RENTAL [ ] LEASED [X] PRIVATELY OWNED	Chambers Tom	(804)887-0000

26. OWNER'S ADDRESS(ES)

700 Latham Drive Newport News, Va.

SECTION III - KILLED OR INJURED *(Use Section VIII if additional space is needed)*

A

27. NAME (Last, first, middle)	28. SEX	29. DATE OF BIRTH
Chambers Tom	M	

30. ADDRESS

700 Latham Drive Newport News, Va.

31. MARK "X" IN TWO APPROPRIATE BOXES	32. IN WHICH VEHICLE	33. LOCATION IN VEHICLE	34. FIRST AID GIVEN BY
[ ] KILLED [X] DRIVER [ ] PASSENGER [X] INJURED [ ] HELPER [ ] PEDESTRIAN	[ ] FED [X] OTHER (2)	Driver seat	EMS York County

35. TRANSPORTED BY	36. TRANSPORTED TO
EMS York County	Riverside Hospital

B

37. NAME (Last, first, middle)	38. SEX	39. DATE OF BIRTH

40. ADDRESS

41. MARK "X" IN TWO APPROPRIATE BOXES	42. IN WHICH VEHICLE	43. LOCATION IN VEHICLE	44. FIRST AID GIVEN BY
[ ] KILLED [ ] DRIVER [ ] PASSENGER [ ] INJURED [ ] HELPER [ ] PEDESTRIAN	[ ] FED [ ] OTHER (2)		

45. TRANSPORTED BY	46. TRANSPORTED TO

47. Pedestrian

a. NAME OF STREET OR HIGHWAY	b. DIRECTION OF PEDESTRIAN *(SW corner to NE corner, etc.)*	
	FROM	TO

c. DESCRIBE WHAT PEDESTRIAN WAS DOING AT TIME OF ACCIDENT *(Crossing intersection with signal, against signal, diagonally; in roadway playing, walking, hitchhiking, etc.)*

NSN 7540-00-634-4041
Previous edition not usable

STANDARD FORM 91 (REV. 2/2004)
Prescribed by GSA-FMR 102-34.295

FIGURE 3-18. Motor Vehicle Accident Report, SF 91 (Sheet 1 of 4)

CLICK HERE TO REPRODUCE AND ANNOTATE THIS FORM

SECTION IV - ACCIDENT TIME AND LOCATION *(Use Section VIII if additional space is needed.)*

48. DATE OF ACCIDENT	49. PLACE OF ACCIDENT *(Street address, city, state, ZIP Code; Nearest landmark; Distance nearest intersection; Kind of locality (industrial, business, residential, open country, etc.); Road description).*
50. TIME OF ACCIDENT 09:15 AM / PM	Intersection of Rt. 238 and Rt. 17, just south of the Coleman Bridge.

51. INDICATE ON THIS DIAGRAM HOW THE ACCIDENT HAPPENED

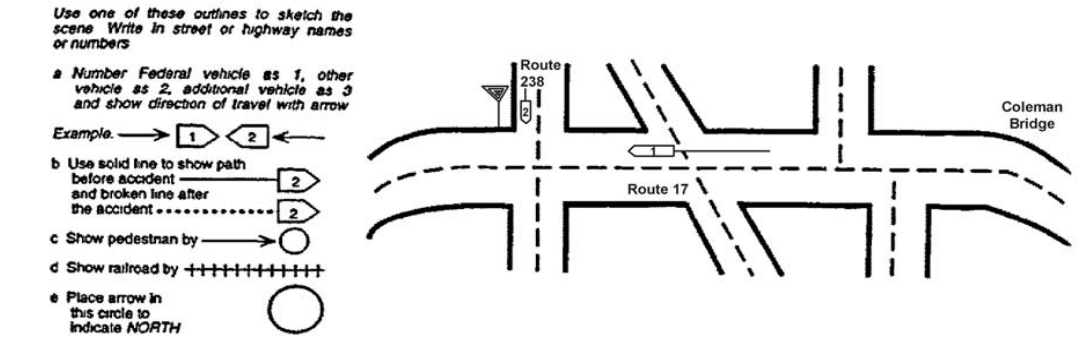

52. POINT OF IMPACT *(Check one for each vehicle)*

FED	2	AREA
X		a. Front
X		b. R. Front
X	X	c. L. Front
		d. Rear
		e. R. Rear
		f. L. Rear
		g. R. Side
	X	h. L. Side

53. DESCRIBE WHAT HAPPENED *(Refer to vehicles as "Fed" , "2", "3", etc. Please include information on posted speed limit, approximate speed of the vehicles, road conditions, weather conditions, driver visibility, condition of accident vehicles, traffic controls (warning light, stop signal, etc.), condition of light (daylight, dusk, night, dawn, artificial light, etc.), and driver actions (making U-turn, passing, stopped in traffic, etc.)*

I was proceeding south on Rt. 17 within the posted speed limit. I crossed the Coleman Bridge approaching the intersection of Rt. 238 when another vehicle suddenly appeared in my lane. It was raining and the roads were slippery. I applied the brakes, but due to the road conditions, was unable to stop in time. My truck struck the other vehicle in the left front fender and driver's side door, flipping the car over and my truck came to rest on top of the car, puncturing his gas tank.

SECTION V - WITNESS/PASSENGER *(Witness must fill out SF 94, Statement of Witness) (Continue in Section VIII.)*

A	54. NAME *(Last, first, middle)* Drew David Ralph	55. WORK TELEPHONE NUMBER (804)887-0000	56. HOME TELEPHONE NUMBER (804)887-0000
	57. WORK ADDRESS 127 S. Jeff St. Portsmouth, Va.	58. HOME ADDRESS 6 North St. Portsmouth, Va.	
B	59. NAME *(Last, first, middle)*	60. WORK TELEPHONE NUMBER ( )	61. HOME TELEPHONE NUMBER ( )
	62. WORK ADDRESS	63. HOME ADDRESS	

SECTION VI - PROPERTY DAMAGE *(Use Section VIII if additional space is needed.)*

64a. NAME OF OWNER *(Last, first, middle)*	64b. WORK TELEPHONE NUMBER ( )	64c. HOME TELEPHONE NUMBER ( )
64d. WORK ADDRESS	64e. HOME ADDRESS	
65a. NAME OF INSURANCE COMPANY	65b. TELEPHONE NUMBER ( )	65c. POLICY NUMBER
66. ITEM DAMAGED	67. LOCATION OF DAMAGED ITEM	68. ESTIMATED COST

SECTION VII - POLICE INFORMATION

69a. NAME OF POLICE OFFICER Sgt. Frank William Pool	69b. BADGE NUMBER 1	69c. TELEPHONE NUMBER (804) 887-0000
70. PRECINCT OR HEADQUARTERS Va. State Police	71a. PERSON CHARGED WITH ACCIDENT Tom Chambers	71b. VIOLATION(S) Failure to yield

STANDARD FORM 91 (REV. 2/2004) PAGE 2

FIGURE 3-18. Motor Vehicle Accident Report, SF 91 (Sheet 2 of 4)

CLICK HERE TO REPRODUCE AND ANNOTATE THIS FORM

SECTION VIII - EXTRA DETAILS

SPACE FOR DETAILED ANSWERS. INDICATE SECTION AND ITEM NUMBER FOR EACH ANSWER. IF MORE SPACE IS NEEDED, CONTINUE ITEMS ON PLAIN BOND PAPER.

PRIVACY ACT STATEMENT

The information on this form is subject to the Privacy Act of 1974 (5 U.S.C. section 552a). Authority to collect the information is Title 40 U.S.C. Section 491 and title 31 U.S.C. Section 7701. The information is required by Federal Government agencies to administer motor vehicle programs, including maintaining records on accidents involving privately owned and Federal fleet vehicles, and collecting accident claims resulting from accidents. Federal employees, and employees under contract, will use the information only in the performance of their official duties. Routine uses of the collected information may include disclosures to: appropriate Federal, State, or local agencies or contractors when relevant to civil, criminal, or regulatory investigations or prosecutions; the Office of Personnel Management and the General Accounting Office for program evaluation purposes; a Member of Congress or staff in response to a request for assistance by the individual of record; another Federal agency, including the Departments of Treasury and Justice, or a court under judicial proceedings; agency Inspectors General in conducting audits; private insurance and collection agencies (including agencies under contract to Treasury to collect debt), and to other agency finance offices for fiscal management and debt collection. Furnishing the requested information is mandatory, including the Social Security Number or Taxpayer's Identification Number (TIN) for use as a unique identifier to ensure accurate identification of individuals or firms in the system.

SECTION IX - FEDERAL DRIVER CERTIFICATION

I certify that the information on this form *(Sections I thru VIII)* is correct to the best of my knowledge and belief.

72a. NAME AND TITLE OF DRIVER	72b. DRIVER'S SIGNATURE AND DATE
JOHN H. DOE TRUCK DRIVER WG-8	

SECTION X - DETAILS OF TRIP DURING WHICH ACCIDENT OCCURRED

73. ORIGIN	74. DESTINATION
	John H Doe
75. EXACT PURPOSE OF TRIP	

	DATE	TIME *(Include AM or PM)*		DATE	TIME *(Include AM or PM)*
76. TRIP BEGAN			77. ACCIDENT OCCURRED		

78. AUTHORITY FOR THE TRIP WAS GIVEN TO THE OPERATOR	79. WAS THERE ANY DEVIATION FROM DIRECT ROUTE?
☐ ORALLY ☐ IN WRITING *(Explain)*	☐ NO ☐ YES *(Explain)*
80. WAS THE TRIP MADE WITHIN ESTABLISHED WORKING HOURS?	81. DID THE OPERATOR, WHILE ENROUTE, ENGAGE IN ANY ACTIVITY OTHER THAN THAT FOR WHICH THE TRIP WAS AUTHORIZED?
☐ YES ☐ NO *(Explain)*	☐ NO ☐ YES *(Explain)*

82. COMPLETED BY DRIVER'S SUPERVISOR	a. DID THIS ACCIDENT OCCUR WITHIN THE EMPLOYEE'S SCOPE OF DUTY	
	☐ YES ☐ NO	b. COMMENTS

83a. NAME AND TITLE OF SUPERVISOR	83b. SUPERVISOR'S SIGNATURE AND DATE	83c. TELEPHONE NUMBER
		( )

STANDARD FORM 91 (REV. 2/2004) PAGE 3

FIGURE 3-18. Motor Vehicle Accident Report, SF 91 (Sheet 3 of 4)

CLICK HERE TO REPRODUCE AND ANNOTATE THIS FORM

SECTION XI - ACCIDENT INVESTIGATION DATA

84. DID THE INVESTIGATION DISCLOSE CONFLICTING INFORMATION. ☐ NO ☐ YES *(If checked, explain below.)*

85. PERSONS INTERVIEWED

NAME	DATE	NAME	DATE
a.		c.	
b.		d.	

86. ADDITIONAL COMMENTS *(Indicate section and item number of reach comment).*

SECTION XII - ATTACHMENTS

87. LIST ALL ATTACHMENTS TO THIS REPORT

SECTION XIII - COMMENTS/APPROVALS

88. REVIEWING OFFICIAL'S COMMENTS

89. ACCIDENT INVESTIGATOR			90. ACCIDENT REVIEWING OFFICIAL		
a. SIGNATURE		b. DATE	a. SIGNATURE		b. DATE
c. NAME *(First, middle, last)*			c. NAME *(First, middle, last)*		
d. TITLE			d. TITLE		
e. OFFICE			e. OFFICE		
f. OFFICE TELEPHONE NUMBER			OFFICE TELEPHONE NUMBER		
AREA CODE	NUMBER	EXTENSION	AREA CODE	NUMBERf.	EXTENSION

STANDARD FORM 91 (REV. 2/2004) PAGE 4

FIGURE 3-18. Motor Vehicle Accident Report, SF 91 (Sheet 4 of 4)

3-5.3. REPORTS OF SECURITY VIOLATIONS. A complete report shall be made of any shortage of AA&E or any violation of security that apparently occurred in transit. Copies of such reports shall be submitted to the NOSSA, Code N5, Farragut Hall, 3817 Strauss Avenue, Suite 108, Indian Head, MD 20640-5151 with a copy forwarded to SDDC. These reports shall be transmitted by the fastest means consistent with appropriate security regulations. The reporting activity shall also promptly notify NOSSA (N5) and SDDC when a shortage is subsequently recovered, indicating the condition of the material as received. In the event of loss of classified material or AA&E, the local office of the Naval Criminal Investigative Service (NCIS) shall also be notified. The NCIS will notify the Federal Bureau of Investigation (FBI) when necessary. For Marine Corps activities involving OT COG material, notification shall be made to HQMC (POS) and COMMARCORSYSCOM (PMAM). OT COG material is conventional ammunition Class V used by the Marine Corps except aviation munitions Class V(A).

3-6. REPORTS OF DISCREPANCY.

3-6.1. TRANSPORTATION DISCREPANCY REPORT, DD FORM 361. The Transportation Discrepancy Report (TDR), DD Form 361, (figure 3-19) shall be used for reporting over, short, astray, loss of, or damage to shipments; improper loading, or blocking or bracing of the load; improper handling by carrier; improper placard; and other transportation discrepancies. The TDR shall not be used to report damages attributed solely to improper packaging. Such damages should be reported on SF 364.

3-6.1.1. Some of the conditions requiring use of the DD Form 361 to report transportation discrepancies are as follows:

a. The value of overages, shortages, or damages is not known, or when it exceeds $100.00. (Damage must be reported within 7 working days.)

b. The overage or shortage is not resolved within 30 days from the date of detection.

c. There is theft, pilferage, or partial loss of container contents while in transit.

d. Astray freight is located in carrier's terminals or warehouses, or is delivered to a military installation by the carrier and there is not sufficient information to permit immediate disposition.

e. Improper loading, handling, blocking, or bracing are detected, regardless of whether loss or damage has resulted.

f. A shipment is misdirected.

g. Placarding, labeling, or certification of the conveyance for transporting A&E is not per DOT or military regulations.

h. Improper or inadequate carriers services or equipment are involved.

i. Carrier tariff requirements or military regulations are not observed.

j. Violations of security regulations including broken or missing seals, or non-compliance with TPS requirements.

k. Significant or repetitive discrepancies are made by the same shipper in the preparation or distribution of BLs.

3-6.1.2. Distribution of the TDR shall be per the instructions detailed in DTR 4500.9-R and NAVSEA SW020-AG-SAF-010. However, in all cases of transportation discrepancies involving Navy shipments of AA&E, one copy of the TDR with a copy of the BL shall be forwarded to NOSSA (N5). For Marine Corps activities involving OT COG material, a copy shall be provided to HQMC (POS) and COMMARCORSYSCOM (PMAM). OT COG material is conventional ammunition Class V used by the Marine Corps except aviation munitions Class V(A).

3-6.1.3. Reporting of Minor In-Transit Damages. DTR 4500.9-R requires the use of SF 1200, GBL Correction Notice, (figure 3-20) for reporting any minor in-transit damage to cargo. Only damages of at least $50.00 are required to be reported via SF 1200. Damages of $100.00 or greater require preparation of an SF 361.

3-6.2. REPORTING IMPROPER PACKAGING, PACKING AND/OR MARKING. Per SECNAVINST 4355.18 (series) and NAVSUP P-723, shipping (item) discrepancies and packing/packaging/ marking discrepancies attributable to the shipper are identified as supply discrepancies, and are reported on a Supply Discrepancy Report (SDR) using the SF-364, Report of Discrepancy (figure 3-21). The term "SDR" identifies all forms and formats of discrepancy reporting that has evolved from the SF 364. The term "packaging" includes preservation materials, inner and outer packaging/packing configurations, and marking. When practicable, technically competent hazardous materials packaging specialists should be consulted to aid in analyzing and reporting packaging deficiencies involving AA&E.

3-6.2.1. Some of the conditions requiring preparation of a SDR are as follows:

a. Any packaging deficiency that results in mission degradation.

b. Any packaging deficiency, regardless of dollar amount, that could cause a potentially hazardous condition, even if no damage or other unsatisfactory condition has resulted.

c. Any packaging deficiency for which the cost of correction is $50.00 or more.

d. Excessive preservation, packaging or packing.

e. Repeated packaging deficiencies by the same shipping activity.

f. Marking deficiencies such as incorrect address information; inadequate marking that requires opening of containers or results in improper handling or stowage; improper identification marking of A&E.

g. Inadequate cushioning, blocking or bracing (within a container).

h. Shortages or overages in excess of $100.00 per line item and all shortages/overages involving classified and/or protected AA&E items, regardless of dollar amount.

i. Missing, incomplete or incorrect shipping documentation.

CLICK HERE TO REPRODUCE AND ANNOTATE THIS FORM

TRANSPORTATION DISCREPANCY REPORT (TDR)	1. DATE	2. REPORT NUMBER	*OMB No. 0702-0124 OMB approval expires Feb 28, 2009*

The public reporting burden for this collection of information is estimated to average 1 hour per response, including the time for reviewing instructions, searching existing data sources, gathering and maintaining the data needed, and completing and reviewing the collection of information. Send comments regarding this burden estimate or any other aspect of this collection of information, including suggestions for reducing the burden, to the Department of Defense, Executive Services Directorate (0702-0124). Respondents should be aware that notwithstanding any other provision of law, no person shall be subject to any penalty for failing to comply with a collection of information if it does not display a currently valid OMB control number.

PLEASE DO NOT RETURN YOUR FORM TO THE ABOVE ORGANIZATION. RETURN COMPLETED FORM TO: SDDC, ATTN: MTDC-OPCL, 661 SHEPPARD PLACE, FORT EUSTIS, VA 23604.

PART I

☐ **REQUEST FOR INFORMATION (RFI)** ☐ **MISCELLANEOUS PROBLEMS** ☐ **ASTRAY FREIGHT**

3. TO	4. REPORTING ACTIVITY
5. CONSIGNOR *(Origin)*	6. CONSIGNEE *(Destination)*
7. SHIPPER	8. CARRIER'S NAME *(SCAC)*
9. CARRIER'S PRO/FREIGHT BILL NO.	10. BILL OF LADING NO./TYPE

11. MODE CODE	12. DATE CARRIER SIGNED FOR SHIPMENT	13. DATE CONSIGNEE RECEIVED SHIPMENT	14. DATE DISCREPANCY DISCOVERED	15. DATE CARRIER NOTIFIED	16. CARRIER REPRESENTATIVE CONTACTED TELEPHONE NO.

17. SEAL NUMBERS AND CONDITION

☐ INTACT ☐ BROKEN/MISSING *(Include details)*

TRANSPORTATION CONTROL NO. 18	COMMODITY DESCRIPTION AND/OR NATIONAL STOCK NO. (NSN) 19	TYPE OF PACK 20	QUANTITY DIS-CREPANT *(Pieces)* 21	TYPE AND CAUSE CODE 22	ISSUE DATA: UNIT OF ISSUE 23	ISSUE DATA: UNITS BILLED/ SHIPPED 24	ISSUE DATA: DISCREPANT: UNITS 25	ISSUE DATA: DISCREPANT: WEIGHT 26	VALUE OR COST OF REPAIRS 27

28. REMARKS *(See preparation instructions of covering regulation for suggested information)*

29a. NAME OF PREPARER *(Type or print)*	29b. EMAIL ADDRESS
29c. TELEPHONE NO.	29d. FACSIMILE NUMBER

30. REPLY

31a. NAME OF RESPONDENT *(Type or print)*	31b. TELEPHONE NO.
31c. EMAIL ADDRESS	31d. FACSIMILE NUMBER / 31e. DATE

DD FORM 361, JUN 2006 REPLACES STANDARD FORM 361 (3-84) WHICH IS OBSOLETE. Adobe Professional 7.0

FIGURE 3-19. Transportation Discrepancy Report (TDR), DD 361

CLICK HERE TO REPRODUCE AND ANNOTATE THIS FORM

GOVERNMENT BILL OF LADING CORRECTION NOTICE

DATE NOTICE PREPARED

1. GBL NUMBER

2. DATE GBL WAS ISSUED

3. TOTAL WEIGHT SHOWN ON GBL

4. ORIGIN *(As shown in "Origin" block on GBL.)*

5. DESTINATION *(As shown in "Destination" block on GBL.)*

6. ROUTE *(Complete routing shown on GBL.)*

7. ISSUING OFFICE *(As shown on GBL under "For use of Issuing Office.")*

8. TO: *(Name and address of carrier/activity to which directed, including ZIP Code.)*

9. Complete Items 9a, b, and c only when correction is made after transportation charges have been paid.

a. D.O. VOUCHER NUMBER

b. D.O. VOUCHER DATE

c. D.O. SYMBOL

10. FROM:

11. BILL OF LADING NOW READS *(Show the information as it reads prior to correction.)*

12. CORRECT BILL OF LADING TO READ *(Show how the corrected information should read.)*

13. AUTHORITY FOR CORRECTION *(Tariff and item numbers; classification and item number; or other authority for making the change.)*

14. REMARKS *(Pertinent information not otherwise provided on the form. If more space is required, use reverse side of this form.)*

15. INFORMATION COPY TO *(Name and address, including ZIP Code.)*

16. SIGNATURE AND TITLE OF INITIATING OFFICIAL

17. CARRIER REPRESENTATIVE'S SIGNATURE *(Require when notice is initiated by shipper and transportation charges are affected.)*

NSN 7540-01-140-5524

STANDARD FORM 1200 (8-82)
Prescribed by GSA, FPMR (41 CFR) 101-41.3

FIGURE 3-20. Government Bill of Lading Correction Notice, SF 1200

CLICK HERE TO REPRODUCE AND ANNOTATE THIS FORM

INSTRUCTIONS

DEPARTMENT OF DEFENSE: DLAR 4140.55/AR 735-11.2/NAVSUPINST 4440.127E/AFR 400-54/MCO 4430.3E, Reporting of Item and Packaging Discrepancies, and/or DLAR 4140.60/AR 12-12/NAVSUPINST 4920.9B/AFR 67-7/MCO 4140.1B, Processing Discrepancy Reports Against Foreign Military Sales Shipments.
CIVILIAN AGENCIES: See FPMR handbook cited in 19(2)(a).

REPORT OF DISCREPANCY (ROD) ☐ SHIPPING ☐ PACKAGING	1. DATE OF PREPARATION	2. REPORT NUMBER
3. TO *(Name and address, include ZIP Code)*	4. FROM *(Name and address, include ZIP Code)*	
5a. SHIPPER'S NAME	5b. NUMBER AND DATE OF INVOICE	6. TRANSPORTATION DOCUMENT NUMBER *(GBL., Waybill, TCN, etc.)*
7a. SHIPPER'S NUMBER *(Purchase Order/Shipment, Contract, etc.)*	7b. OFFICE ADMINISTERING CONTRACT	8. REQUISITIONER'S NUMBER *(Requisition, Purchase Request, etc.)*

9. SHIPMENT, BILLING, AND RECEIPT DATA				10. DISCREPANCY DATA				11.
NSN/PART NUMBER AND NOMENCLATURE (a)	UNIT OF ISSUE (b)	QUANTITY SHIPPED/ BILLED (c)	QUANTITY RECEIVED (d)	QUAN-TITY (a)	UNIT PRICE (b)	TOTAL COST (c)	1 CODE (d)	2 AC-TION CODE

12. REMARKS *(Continue on separate sheet of paper if necessary)*

1 DISCREPANCY CODES		2 ACTION CODES
CONDITION OF MATERIAL C1 - In condition other than that indicated on release/receipt document C2 - Expired shelf life C3 - Damaged parcel post shipment SUPPLY DOCUMENTATION D1 - Not received D2 - Illegible or mutilated D3 - Incomplete, improper or without authority *(Only when receipt cannot be properly processed)* MISDIRECTED MATERIAL M1 - Addressed to wrong activity OVERAGE/DUPLICATE SHIPMENTS O1 - Quantity in excess of that on receipt document O2 - Quantity in excess of that requested *(Other than unit of issue pack)* O3 - Quantity duplicates shipment PACKING DISCREPANCY P1 - Improper preservation P2 - Improper packing P3 - Improper marking P4 - Improper unitization	PRODUCT QUALITY DEFICIENCIES Q1 - Deficient material *(Applicable to Grant Aid and FMS shipments)* SHORTAGE OF MATERIAL S1 - Quantity less than that on receipt document S2 - Quantity less than that requested *(Other than unit of issue pack)* S3 - Non-receipt of parcel post shipments ITEM TECHNICAL DATA MARKINGS *(i.e., Name Plates, Log Books, Operating Handbooks, Special Instructions, etc.)* T1 - Missing T2 - Illegible or mutilated T3 - Precautionary operational markings missing T4 - Inspection data missing or incomplete T5 - Serviceability operating data missing or incomplete T6 - Warranty data missing WRONG ITEM *(Identify requested item as a separate copy in Item 9 above)* W1 - Incorrect item received W2 - Unacceptable substitute OTHER DISCREPANCIES Z1 - See remarks	1A - Disposition instructions requested *(Reply on reverse)* 1B - Material being retained *(See remarks)* 1C - Supporting supply documentation requested 1D - Material still required expedite shipment *(Not applicable to FMS)* 1E - Local purchase material to be returned at supplier's expense unless disposition instructions to the contrary are received within 15 days *(Reply on reverse) (Not applicable to FMS)* 1F - Replacement shipment requested *(Not applicable to FMS)* 1G - Reshipment not required. Item to be re-requisitioned 1H - No action required. Information only. 1Z - Other action requested *(See remarks)*

13. FUNDING AND ACCOUNTING DATA

14a. TYPED OR PRINTED NAME, TITLE, AND PHONE NUMBER OF PREPARING OFFICIAL	14b. SIGNATURE

15. DISTRIBUTION ADDRESSEES FOR COPIES

364-103 7540-00-159-4442 *(Previous edition is obsolete.)* **STANDARD FORM 364** (REV. 2-80) (EG)
Prescribed by GSA FPMR 101-26.8

FIGURE 3-21. Report of Discrepancy (ROD), SF 364 (Sheet 1 of 2)

CLICK HERE TO REPRODUCE AND ANNOTATE THIS FORM

16. FROM:	17. DISTRIBUTION ADDRESSEES FOR COPIES

18. TO:	
• •	Use window envelope to mail this document. Insert name and address, including ZIP Code, starting one typing space below the left dot. Each address line must NOT extend beyond right dot. Address must not exceed four single space typing lines.

19. IN ACCORDANCE WITH NOTICE OF DISCREPANCY ON FACE OF THIS FORM:

Fold here

a. MATERIAL ☐ HAS BEEN ☐ WILL BE SHIPPED — DOCUMENT NUMBER

b. ☐ NO RECORD OF SHIPMENT. RESUBMIT REPORT TO PROPER OFFICE UNDER APPROPRIATE REGULATION.

c. ☐ AN ADJUSTMENT IN BILLING HAS BEEN/WILL BE PROCESSED AS A: ☐ CREDIT ☐ DEBIT

d. ☐ INVOICE/BILL ATTACHED

e. ☐ PROOF OF DELIVERY (Parcel Post Shipments) OR EVIDENCE OF SHIPMENT ENCLOSED.

f. ☐ AN ADJUSTMENT IN BILLING FOR THE REPORTED DISCREPANCY WILL NOT BE PROCESSED FOR THE FOLLOWING REASON WHICH IS CITED IN THE INDICATED REGULATION.

(1)	REASON FOR NOT PROCESSING	(2)	PRESCRIBING REGULATION
	(a) DISCREPANCY WAS NOT REPORTED WITHIN THE TIME FRAMES ALLOWED AND/OR		
	(b) DOLLAR VALUE DOES NOT MEET THE CRITERIA PRESCRIBED IN THE REGULATION OR AGREEMENT INDICATED IN 19f(2)		

20. THE FOLLOWING DISPOSITION IS TO BE MADE OF THE REFERENCED MATERIAL:

a. ☐ PROCESS FOR DISPOSAL IN ACCORDANCE WITH SERVICE/AGENCY DIRECTIVES	b. ☐ REPRESENTATIVE WILL CALL FOR DISCUSSION CONCERNING DISPOSITION IN:	DAYS
c. ☐ RETAIN MATERIAL AT NO CHARGE.	d. ☐ MATERIAL WILL BE PICKED UP IN:	DAYS

e. ☐ SHIP MATERIAL *(Specify location)*:

Fold here

(1) ☐ GBL APPROPRIATION CHARGEABLE:

(2) ☐ CHARGES COLLECT - VIA: ☐ FREIGHT ☐ EXPRESS ☐ PARCEL POST

(3) ☐ PARCEL POST LABEL ATTACHED (4) ☐ FREIGHT PREPAID

($ _____ postage advanced herewith. NOTE: Please enclose postage. Material cannot be returned Parcel Post collect.)

f. ☐ OTHER *(Specify)*

21. ☐ IF MATERIAL IS STILL REQUIRED, SUBMIT NEW REQUISITION	22. ☐ REPLACEMENT WITH SATISFACTORY MATERIAL WILL BE MADE ON OR BEFORE:	DATE

23. REMARKS *(Continue on separate sheet of paper if necessary)*

24a. TYPED OR PRINTED NAME AND PHONE NUMBER OF PREPARING OFFICIAL	24b. SIGNATURE	24c. DATE

FIGURE 3-21. Report of Discrepancy (ROD), SF 364 (Sheet 2 of 2)

3-6.2.2. SF 364 shall not be used to report any of the following conditions:

a. Transportation type discrepancies (i.e. shortages, losses, or damage) that occurred in-transit and were reported as transportation discrepancies on the TDR, per DTR 4500.9-R, Chapter 210.

b. Improper carrier facilities or handling by carriers.

c. Damage resulting from fire, collision, wreck, or other catastrophes occurring to carrier facilities.

d. Rejecting shipments, requesting surveys, or initiating claims against carriers for damages.

3-6.2.3. Packaging deficiencies resulting in damaged material which may endanger life, impair combat or deployment operations, or affect other material shall be reported immediately to the shipping activity by the most expeditious means. This notification will not nullify the requirement for initiating the SF 364. The reporting activity shall forward a SF 364 within 24 hours of the initial communication.

3-6.2.4. Detailed instructions for the preparation and distribution of the SF 364 are presented in SECNAVINST 4355.18 (series) and NAVSUP Pub P-723, chapter 6. However, in all instances involving packaging deficiencies in AA&E shipments, one copy of the SF 364 shall be forwarded to NOSSA (N5).

CHAPTER 4

PREPARATION FOR SHIPMENT BY MILITARY AND COMMERCIAL MOTOR VEHICLES

4-1. INTRODUCTION.

This chapter explains the duties of explosives drivers and inspectors of military and commercial motor vehicles transporting arms, ammunition, explosives and related hazardous materials (AA&E). The information provided includes the following:

a. Shipping regulations.

b. Military and commercial motor vehicle specification.

c. Inspection of empty incoming motor vehicles.

d. Loading and handling regulations.

e. Placarding.

f. Seals.

g. Inspection prior to release of loaded motor vehicle.

h. Shipping papers and written instructions to drivers.

4-1.1. SHIPPING REGULATIONS. All transportation safety and security regulations addressed in this manual are derived from requirements specified in 49 CFR 101-178 and 383-397, DTR 4500.9-R and NAVSEA SW020-AG-SAF-010. All Navy and Marine Corps military and civilian supervisory personnel and/or department heads responsible for the safe and secure transport of DOD owned AA&E shall ensure that current copies of these regulations are maintained in their respective office libraries in a readily accessible location. Local written standards and instructions shall be developed by each affected command with respect to station operations for the loading, inspection, release, receipt, and off-load of AA&E. Federal, DOD, Navy and pertinent local activity instructions affecting the safe and secure transport of these materials shall be strictly enforced.

4-2. MILITARY AND COMMERCIAL MOTOR VEHICLE SPECIFICATIONS.

The transportation of Class/Division 1.1 through 1.6 ammuntion, explosives and related hazardous materials (A&E), on-station and over public highways is authorized in trucks, full trailers, semi-trailers and double trailers equipped with closed bodies, flatbeds, stake-sides, dromedary containers and open tops (see figure 4-1). Refer to the following paragraphs for specific criteria.

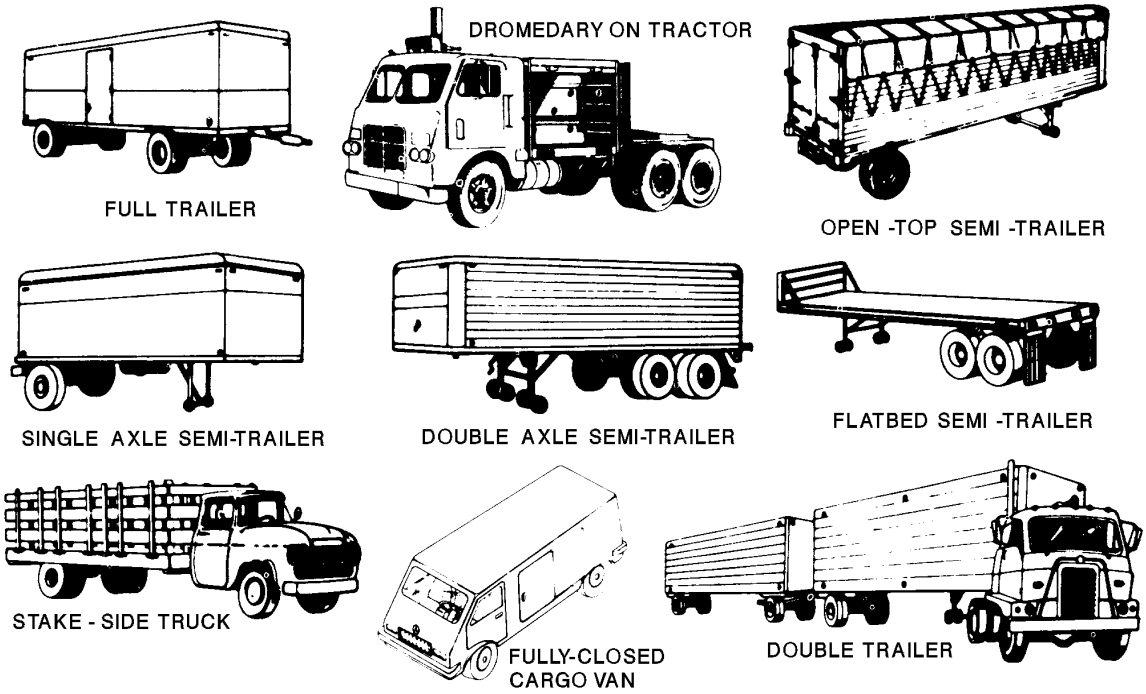

FIGURE 4-1. Types of Motor Vehicles Used for Transporting AA&E On-Station and Over Public Highways

a. For off-station movement, flatbed trailers are used to transport long, higher cube, and heavy ordnance items (large missiles, torpedoes, underwater mines, 2,000 pound bombs, etc.) per the MIL-STD-1320 dash sheet applicable to the item (NSN/NALC) to be shipped (see NAVSEA SW020-AG-SAF-010, paragraph 5-13). Also for off-station movements, all palletized/unitized and non-palletized/unitized boxed ordnance items shall be shipped in closed van trailers per the MIL-STD-1320 dash sheet applicable to the item (NSN/NALC) to be shipped. Palletized/unitized and non-palletized/unitized boxed ordnance shall not be combined with long, higher cube, or heavy ordnance items aboard a flatbed trailer. General procedures and practices applicable to loading, blocking, and bracing ordnance items for highway transportation are addressed in MIL-STD-1320 (series). In the event that a corresponding MIL-STD-1320 dash sheet is not available for the ordnance item to be shipped, contact the Naval Packaging, Handling, Storage and Transportation (PHST) Center, (732) 866-2851, for instructions.

b. Every motor vehicle transporting AA&E off-station must either have a closed body or have the load covered with a fire and water-resistant tarpaulin(s). The requirement for the use of a tarpaulin will be annotated on the bill of lading (BL). The tarpaulin will be securely fastened to the vehicle by rope or wire tie-down so as to fully protect the vehicle from sparks, fire and moisture. Military motor vehicles transporting AA&E on-station may be exempt from the tarpaulin requirement during clear weather, but not during inclement weather, unless the exception criteria found in NAVSEA SW023-AG-WHM-010 is met.

c. Motor vehicles using compressed natural gas (CNG) may be used to transport AA&E both on-station and off-station providing the safety requirements of NAVSEA SW020-AG-SAF-010 are met. Liquefied petroleum gas (LPG), propane or butane may be used as a vehicle fuel source when it is in fuel tanks that are external to the cargo space and it complies with the vehicle safety requirements of NAVSEA OP 5 Volume 1 and NAVFAC P-300.

d. Any modification, alteration or addition (permanent or temporary) made to Navy-owned motor vehicles in order to facilitate cargo movements consisting of A&E must be approved by NOSSA (N5), working in concert with the Naval PHST Center. The requesting agency must also coordinate modification of this kind in accordance with guidance provided in NAVFAC P-300.

WARNING

Plastic bedliners generate static electricity and are not authorized for use in the transport of scrap or bulk explosives in any container, nor for the transport of any ammunition or explosive that is not packaged in its approved shipping container. Special care shall be taken to secure all cargo in motor vehicles when plastic bedliners are authorized, due to the slippery nature of the liner surface. In addition, the filling of gas cans with flammable liquids while sitting on a liner in a truck bed is prohibited, as it has been identified as a cause of inadvertent ignition.

4-2.1. FULLY CLOSED VEHICLES. A fully closed vehicle is equipped with permanent sides and a permanent top. The exterior surface shall be constructed of fireproof, noncombustible materials. There shall be no exposed ferrous metal on the floors or interior walls which may come in direct contact with the explosive item. The doors shall be tight fitting, securely affixed to hinges and equipped with suitable latches and operational locks.

4-2.2. DOUBLE TRAILERS. The use of double trailers (doubles) is authorized provided the following conditions are satisfied:

a. Delivery can be accomplished without transfer of the cargo. The consignor will attach a statement to the carrier's copy of the BL or other shipping documents stating that transfer of the cargo is prohibited unless required by reason of emergency.

b. There is compliance with 49 CFR 393.70(a) through (d).

c. The cargo in each trailer shall meet the compatibility requirements of table 4-1. However, compatibility between the two trailers is not required except as indicated in 49 CFR 177.835(c).

4-2.3. DROMEDARIES. Dromedaries are freight boxes carried on, and securely fastened to, the chassis of the tractor or on a flatbed trailer (see terms and abbreviations for a more complete definition). Some carriers provide the same service in small motor vehicles. All explosive items carried in the dromedary must be compatible, and in compliance with 49 CFR 177 or host nation regulations. However, non-compatible materials loaded on separate dromedaries are authorized. See figure 4-2 for further clarification.

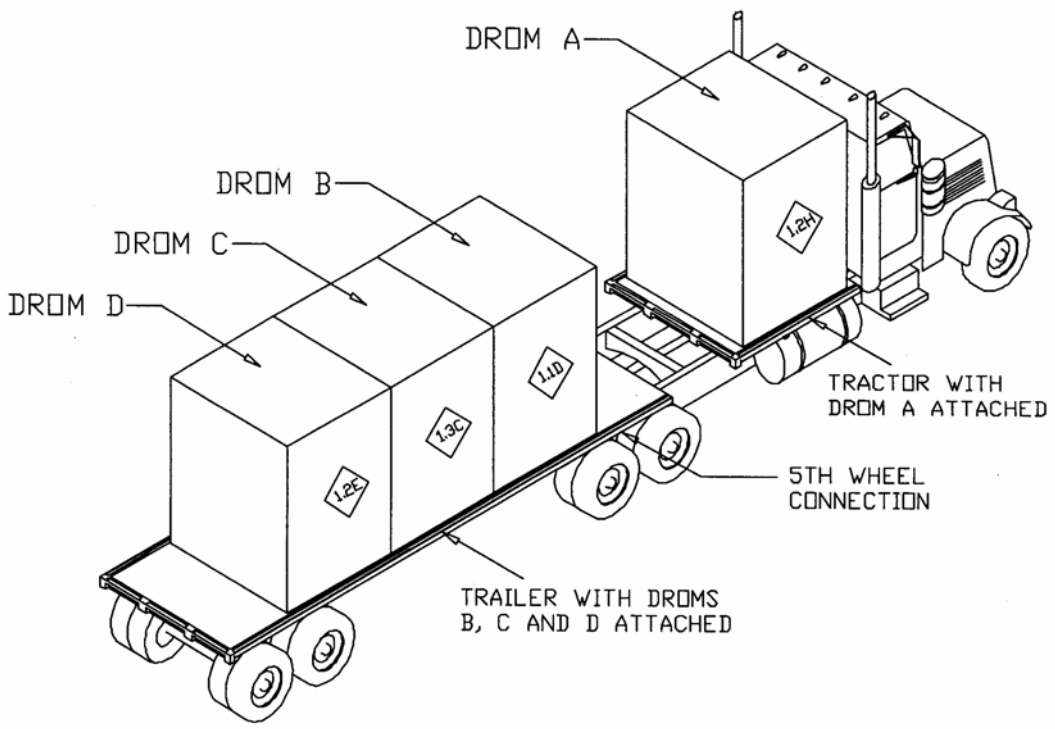

A&E CLASSIFIED AS 1.2H IS NOT COMPATIBLE WITH 1.1D, 1.3C AND 1.2E. HOWEVER, SINCE THE 1.2H IS LOADED ABOARD THE DROM A THAT IS ATTACHED TO THE TRACTOR, AND 1.1D, 1.3C AND 1.2E ARE LOADED ABOARD DROM B, C, AND D RESPECTIVELY, WHICH ARE ATTACHED TO THE TRAILER, THE LOAD IS PERMISSIBLE.

FIGURE 4-2. Permissible Dromedary Load

4-2.4. STAKE-SIDE TRUCKS, OPEN-TOP SEMI-TRAILERS, AND SOFT-SIDE TRAILERS. Stake-side trucks and open-top semi-trailers shall have side and end members or gates of such strength and design as to securely contain all units or portions of the cargo under existing road conditions. Soft-side trailers (trailers with a permanent top, front and back with curtains constructed around the perimeters), stake-side trucks or open-top semi-trailers are suitable substitutes for standard flatbed trailers when used to load and transport large and long ordnance items, such as torpedoes and guided missiles. Consult the appropriate load drawing to verify the need for a flatbed trailer per each planned shipment of a large and long piece of ordnance. Soft-side trailers must meet the following conditions:

a. Trailers must have rubrails as prescribed in MIL-STD-1320 (Navy).

b. Trailers must have forward bulkhead and nailable decks.

c. Trailer curtain must be fire and water resistant, and the curtain or its supports must not interfere with the proper positioning and tiedown of the load or be used in any manner as a method of load restraint.

d. The tarpaulins that are usually called out in the general notes of individual MIL-STD-1320 slash sheets or approved NAVSEA drawings may be omitted when the soft-side curtain completely surrounds the load. However, any portion of the load that is still visible from the outside must be covered by fire and water resistant tarpaulins.

CAUTION

Stake-side trucks, open-top semi-trailers, or soft-side trailers shall not be substituted for enclosed trailers or vans when transporting palletized or non-palletized/unitized boxed ordnance (See paragraph 4-2a). Soft-side trailer curtains and their supports are not designed to restrain cargo, as are the walls of enclosed trailers and vans, and do not provide the same level of security.

4-2.4.1. Pickup Trucks. Pickup trucks equipped with hard covers securely bolted to the side rail of the cargo compartment, and which have lockable tailgates, may be used to transport limited quantities of AA&E for short distances off-station (refer to paragraph 2-7.4 and NAVSEA OP 5 Volume 1). Cargo loaded on pickup trucks, must be properly blocked and braced to guard against longitudinal or lateral movement. Use of pickup trucks should be kept to a minimum and used only when closed vehicles are not readily available. Refer to NAVSEA SW023-AG-WHM-010 for complete detail on loading and dunnaging pickup trucks and guidelines governing the use of pickup trucks for on-station movements of AA&E.

4-2.4.2. Military Tactical Vehicles Including the High Mobility Multipurpose Wheeled Vehicle. Military tactical vehicles including the High Mobility Multipurpose Wheeled Vehicle (HMMWV) that are designed for public highway use may be used to transport conventional ammunition and weapons off-station. U.S. Army drawings (series 19-48) for tactical vehicle and dromedary loads are approved for Navy and Marine Corps use.

4-2.4.3. Medium Tactical Vehicle Replacement (MTVR) Trucks Configured with TRICON Containers. The use of MTVR trucks configured with TRICON containers to transport AA&E off-station is endorsed provided the following conditions are met:

a. The maximum net weight and gross weight limit of the TRICON container (12,300 lbs. and 14,900 lbs. respectively) are not exceeded.

b. The maximum cargo weight of 30,000 lbs. (15 tons) for which the MTVR truck was tested and qualified is not exceeded.

c. All commodities loaded into the TRICON container are blocked and braced in accordance with approved DOD procedures.

d. There is compliance with all applicable requirements of 49 CFR and DTR 4500.9-R.

e. Each TRICON is secured to the cargo deck of the MTVR using ISO twistlock fittings at all four corners of the TRICON container. Both the left and right door of the TRICON container must be sealed as detailed in paragraph 4-8.

4-2.5. SAFETY EQUIPMENT. It shall be the duty of the explosives driver to inspect the vehicle for the following equipment:

a. One fully charged Underwriters Laboratory (UL) rated 10 B:C or greater capacity fire extinguisher installed (see paragraph 9-5.1).

b. Tools for changing tires (if vehicle is equipped with spare tires).

c. Seat belts installed at the driver's seat and at the right front outboard seat, if applicable.

d. The equipment and accessories shown in figure 4-3 (carried in the cab or on the running boards for off-station shipments, per paragraph 4-2.5.1).

e. A set of tire chains for at least one driving wheel on each side for inclement weather conditions.

f. One set of wheel chocks.

4-2.5.1. Tools and Tool Boxes. Tool boxes for motor vehicles transporting AA&E off-station shall be mounted on the running boards or within the cabs. They shall not be installed within the cargo space or within the body of the vehicle. The boxes shall be made of metal with lids or covers that close securely. Tool boxes containing waste materials shall be kept free of oil and grease. Tools and tool boxes are not required in vehicles used for on-station movement.

4-2.6. RED EMERGENCY LIGHTS. Since most state vehicle codes reserve red warning lights for authorized emergency vehicles only, red emergency lights shall not be installed or used on the front or top of any vehicle transporting AA&E over the public highways or roads.

NOTE

When responding to emergency calls, explosive ordnance disposal (EOD) vehicles are exempt from this publication. They must, however, comply with local operating procedure and civil regulations.

A -PYROTECHNIC BOX
B -10" ADJUSTABLE WRENCH
C -8" ADJUSTABLE WRENCH
D -PHILLIPS HEAD SCREWDRIVER
E -SCREWDRIVER
F -BATTERY PLIERS
G -COMPLETE SET OF SPARE FUSES OR OTHER NON -RESET OVERLOAD DEVICES
H -SEALS (FOR RESEALING TRUCK IF OPENED)
I -FLASHLIGHT
J -GROUNDING CABLE (WHEN FUELING)
K -SHIPPING PAPERS
L -RED EMERGENCY REFLECTIVE TRIANGLES
M -EXPLOSIVES DRIVER'S HANDBOOK (GLOVE BOX EDITION)
N -ACTIVITY DRIVER'S REGULATIONS
O - MOTOR VEHICLE ACCIDENT REPORT (SF 91)

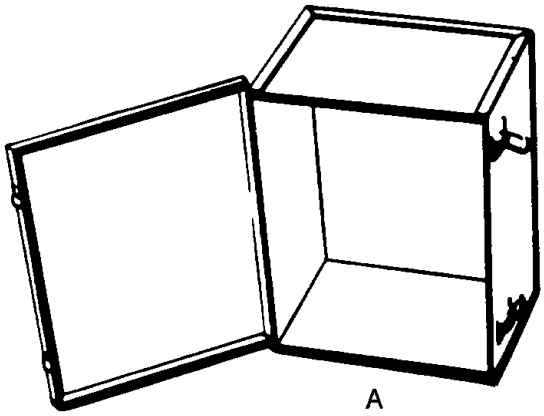

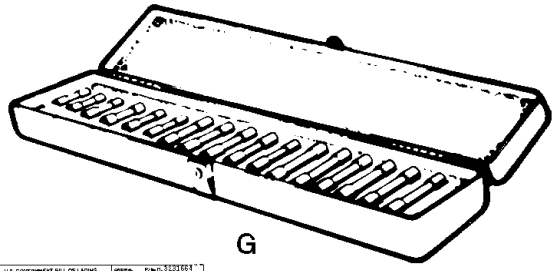

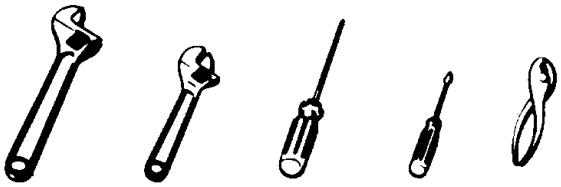

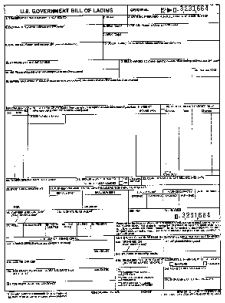

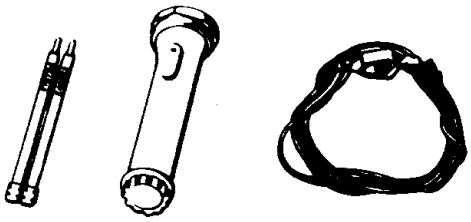

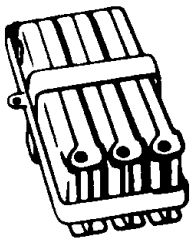

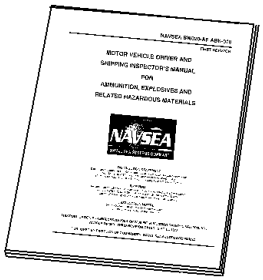

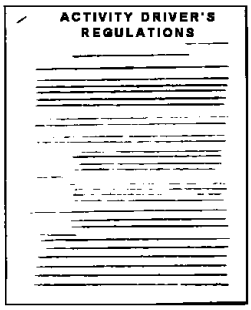

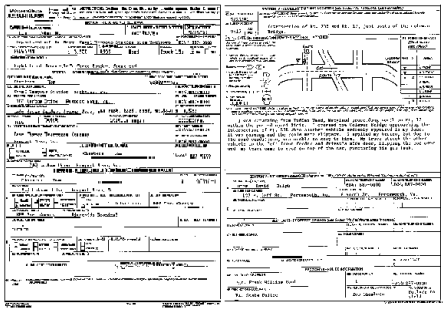

M N O

FIGURE 4-3. Safety Equipment Required on Vehicles

4-3. INSPECTION OF EMPTY INCOMING MILITARY AND COMMERCIAL MOTOR VEHICLES.

When an empty commercial motor vehicle to be loaded with AA&E arrives at a military activity, the shipping inspector shall ensure the inspection of the motor vehicle is per the safety regulations contained in DD Form 626 (refer to appendix A of this manual). Navy-owned motor vehicles used for the transportation of AA&E shall be inspected at frequent, regular intervals by a competent person to ensure the mechanical condition of the vehicle is satisfactory and all parts and accessories for safe operation are in good working order per NAVSEA OP 5 Volume 1 and NAVFAC P-300. Marine Corps activities shall comply with the additional requirements of MCO 8020.10. The shipping inspector and explosives driver shall share the responsibility for the complete inspection of the motor vehicle. The shipping inspector shall inspect the following:

a. Cargo space.

b. Mechanical condition.

c. Suitability of the driver and proper ownership. The driver must possess:

(1) Valid driver's license(s) for the type of vehicle, as outlined in table 2-1.

(2) Current medical examiner's certificate.

(3) Military and civilian drivers shall be qualified and trained as explosives drivers per the requirements of paragraphs 2-2 and 2-3 of this manual.

d. Any evidence of sabotage or tampering with the vehicle.

4-3.1. CARGO SPACE. The shipping inspector shall inspect the cargo space for the following:

a. Suitability of vehicle for the intended cargo.

b. The cargo space is constructed of fire-resistant or fireproof materials and is clean and free of contamination.

c. There are no protruding nails, screws, bolts or any other object in the cargo space that could damage the load.

d. Floors, walls and roof of the vehicle are constructed so as to fit together with no breaks, tears, slits or holes.

e. Floors are not permeated with oil, gasoline or any other combustible or corrosive liquid or solid.

WARNING

Plastic bedliners generate static electricity and are not authorized for use in the transport of scrap or bulk explosives in any container, nor for the transport of any ammunition or explosive that is not packaged in its approved shipping container. Special care shall be taken to secure all cargo in motor vehicles when plastic bedliners are authorized, due to the slippery nature of the liner surface. In addition, the filling of gas cans with flammable liquids while sitting on a liner in a truck bed is prohibited, as it has been identified as a cause of inadvertent ignition.

f. Properly packaged ammunition unitized on Navy approved ferrous metal pallets may be loaded aboard vehicles equipped with ferrous metal cargo beds, provided that those unitized loads are properly secured to the bed of the vehicle. If there is a possibility of explosive exudate leakage (dust, powder, or vapor), where a metal-to-metal spark could cause an accidental ignition of explosive materials and/or explosion, the cargo bed must be lined with nonferrous materials (such as wood). As long as the metal nails or other fasteners used to hold a wood pallet together will not come in contact with the metal cargo bed, a wood pallet meets this requirement. Cardboard or other fiber covering of paper is not permissible. Unpalletized ammunition packed in ferrous metal containers may be loaded aboard vehicles equipped with ferrous metal cargo beds, provided the load is in conformance with an existing DOD load drawing and is not liable to leakage of explosive exudate. Drop-in or sprayed-on plastic bedliners are only authorized if the cargo is packaged in its approved shipping container. Special care shall be taken to secure all cargo in vehicles with plastic bedliners because of the slippery nature of the liner surface. Refer also to appendix A, paragraph 12(o) for cargo space inspection requirements.

g. The tailgates and doors of the cargo space shall be tightfitting, securely affixed to the hinges, and equipped with suitable latches and locks.

(1) Trailers, straight trucks and/or dromedary boxes used to transport sensitive conventional AA&E must have all door hinges and hasps installed to preclude removal when doors are closed and locked. Hinges and hasps shall be attached to doors by welding bolts or by riveting.

(2) For each door hinge, door level handle, seal plate, pin, and bottom cam guide to the lock shaft, a minimum of one bolt must be either welded or riveted in a manner to prohibit easy removal. A bolt may also be turned inward with the nut on the inside as long as the bolt is flush with the nut. The use of cotter-pin type fasteners for hinge pins is not acceptable, as this device is easily removed. A bolt/nut configuration that is welded offers a better alternative. This requirement applies to each hinge pin. Refer to DTR 4500.9-R for further detail.

h. A motor vehicle used to transport material marked as or known to be poison must be inspected for contamination before reuse. A motor vehicle that has been contaminated must not be used or returned to service until the contamination has been removed (see paragraph 6-5.4). Spilled material and contaminated dunnage, flooring, etc., must be managed and disposed of per federal, state and local requirements for solid and hazardous waste. This requirement does not apply to motor vehicles used solely for transporting such poisons as long as they are in that service.

i. Motor vehicles to be used for the transportation of Hazard Class/Divisions 1.1 through 1.4 A&E and other regulated material, 2.3 (RIH) poisonous gases or 6.1 (PIH) poisonous materials over public highways will be inspected by the shipping activity using DD Form 626 (figure 3-4), this manual, 49 CFR, and DOD safety regulations. Refer to table 3-1 regarding shipments containing only 1.4 explosives. Only deficiency free vehicles will be accepted for loading. Deficiencies shall be corrected by the carrier before vehicles are permitted to enter sensitive or restricted areas.

j. All commercial carrier vehicles intended for the transport of sensitive conventional AA&E will be inspected to ensure they are equipped with a functioning satellite transceiver for use in providing Satellite Motor Surveillance Service. The transceiver should have an attached or integral panic button which can be activated with a single stroke by the driver. The driver should be asked to confirm the above and that the satellite unit on the truck is currently registered with the Defense Transportation Tracking Systems (DTTS) and indicates "DTTS on". If any of the above is in question, DTTS can be contacted at 1-800-826-0794 for guidance/assistance. A DTTS monitoring system found to be defective must be corrected prior to loading. If the DTTS monitoring system cannot be repaired, the shipment will not be loaded on the vehicle.

4-3.2. MECHANICAL INSPECTION. The shipping inspector shall inspect the motor vehicle to ensure compliance with the safety regulations of Section II, items 10 through 17 of DD Form 626. Any item marked unsatisfactory shall be explained in the “REMARKS” column. Vehicle and Equipment Operational Record, NAVMC 10627 (figure 3-5), may be used for the mechanical inspection of motor vehicles for on-station moves or moves that meet the criteria described in paragraph 3-3.3.

4-3.2.1. Temperature Control Devices. The shipping inspector shall ensure that the requirements of 49 CFR Part 177.834 are met when a conveyance with a temperature control device is to be used to transport A&E. The following criteria must be met when Class 1 A&E are to be transported in a conveyance with a temperature control device:

a. The temperature control device must be rendered inoperable by draining or removing the fuel tank and disconnecting the power source prior to loading. The conveyance shall be inspected to ensure compliance with this regulation, unless the load is transported under a DOT Special Permit or Competent Authority Approval (CAA).

b. If the above criteria are not met before loading, the shipment shall be rejected and the DD Form 626 under item 12(t) "Other", to be specified as "heating unit", shall be so annotated.

4-3.2.2. When flatbed trailers are presented for inspection, ensure that sufficient chains and binders are present to secure the load per MIL-STD-1320.

4-3.2.3. Before the motor vehicle is released for loading, the shipping inspector shall ensure that the first portion of DD Form 626 has been signed and approved. If a motor vehicle or driver is determined to be unsatisfactory, the vehicle shall not be accepted for loading and the inspector shall appropriately mark the “REJECT” block. In this instance, additional copies of DD Form 626 must be made and distributed by the transportation officer per NAVSEA SW020-AG-SAF-010.

4-3.2.4. Before the conveyance is released for loading, the shipping inspector shall ensure that the shipment weight is identified using one of the various available methodologies to include truck scales,

load scales, MIL-STD notional weights, or projected weights derived from automated shipping systems e.g. Global Freight Management (GFM), Cargo Movement Operation System (CMOS).

4-4. LOADING INSPECTION OF MOTOR VEHICLES.

4-4.1. DRIVER'S RESPONSIBILITY. The explosives driver shall have primary responsibility for the safe and efficient transportation of the AA&E in the motor vehicle. In addition, the explosives driver shall:

a. Share the responsibility for the mechanical condition of the vehicle with equipment and loading inspectors.

b. Ensure proper loading and compatibility of the cargo. Sealed loads are excepted from driver responsibility.

c. Have the right to reject the motor vehicle when, in the driver's opinion, the vehicle's condition is unsafe for transporting AA&E. Only after the checklist is completed to the driver's satisfaction shall the driver accept and move the vehicle.

d. Check and sign for items 1 through 28 of DD Form 626 in situations when the dispatch of a qualified inspector, as set forth in paragraph 2-3, is not practicable. Such situations may include point-to-point on-station moves that require crossing over a public roadway; movements between an ammunition issue point on-station and an ammunition range outside of, but in reasonably close proximity to, the station. This exception criteria pertains only to organic shipments transported in DOD or Navy-owned vehicles and driven by a government civilian explosives driver or military explosives driver.

4-4.2. INSPECTOR'S RESPONSIBILITY. After the motor vehicle has been loaded with A&E, the shipping inspector shall be responsible for the following:

a. Correct marking and labeling of packaging and containers, including dromedaries.

b. Compatibility and correct arrangement of mixed loads.

c. Correct blocking and bracing.

d. Removal of all waste material and loading equipment from the motor vehicle.

e. Follow inspection criteria in references cited in paragraph 4-5.

4-5. LOADING AND HANDLING REGULATIONS.

4-5.1. GENERAL. The utmost care and discretion shall be exercised by everyone involved in the handling of all AA&E. AA&E shall be handled in a manner to protect against shock or friction that may cause a fire, explosion, or damage the material. Extraneous cargo shall not be combined with AA&E cargo aboard the same conveyance. Cargo compatibility rules, per NAVSEA SW020-AC-SAF-010, paragraphs 2-3.9 through 2-3.9.2, shall be strictly adhered to and vigorously enforced. NAVSEA OP 5 Volume 1 and MCO 8020.10 present applicable safe handling and loading regulations.

4-5.1.1. Anyone desiring to deviate from existing mandatory regulations governing the safe and secure transport of AA&E on/off station for reasons attributed to operational necessity must send a letter to NOSSA (Code N5), with a copy to the PHST Center, detailing the precise nature of the deviation and stating the reasons why the deviation is necessary. In cases involving emergent military and/or industrial contingencies, requests to deviate can be expedited via electronic (EMAIL/message) means. A written account of the deviation action will follow the expedited electronic communication.

NOTE

Blocking and bracing shall never be nailed to container pallets. Loose steel strapping shall never be reused or retensioned. Loose steel strapping shall be removed, disposed of and new strapping applied.

4-5.2. BLOCKING AND BRACING. The detailed requirements for the loading, blocking and bracing of AA&E are presented in MIL-STD-1320 (WR-51). Training and dummy (loads), handling shapes and other inert ordnance items which simulate tactical weapons shall be blocked and braced per the general principles outlined in MIL-STD-1320. Where cargo is loaded in a manner that the shipping inspector cannot determine if it meets the requirements of the pertinent MIL-STD (WR) or approved NAVSEA drawing, a certification on the shipping papers should be obtained from the loading personnel. When a detailed MIL-STD (WR) slash sheet or approved NAVSEA drawing does not exist for a specific item, the inspector shall perform an inspection per the general principles contained in MIL-STD-1320 (basic). Loading and bracing of AA&E in dromedary type containers shall be per NAVSEA SW020-AG-SAF-010. The Explosives Safety Technical Manuals CD-ROM provides an index to truckloading standards. Refer to paragraph 4-5.9 for further detail.

4-5.3. PACKAGES AND CONTAINERS (INCLUDING DROMEDARIES). A dromedary is a container that can be mounted behind the power unit of a truck or carried on a flatbed trailer, and which can be used to transport less-than-truckload (LTL) shipments of AA&E, SECRET, CONFIDENTIAL, Controlled Cryptographic Item (CCI) or sensitive material. Prior to loading the motor vehicle, packages and containers (including dromedaries) of A&E shall be inspected to ensure that they are properly packaged, labeled and marked according to DOT and DOD requirements. Refer to NAVSEA SW020-AG-SAF-010 for guidance on the restriction against the use of Wood Packaging Materials (WPM) on international shipments. Detailed instructions for inspecting, marking and labeling of packages and containers for shipment and storage are contained in MIL-STD-129, MIL-STD-130, NAVSEA SW020-AG-SAF-010 and NAVSEA SW020-AC-SAF-010 respectively. Containers and packages of A&E destined for transshipment via air shall be inspected to ensure that requirements of NAVSUP Pub 505 (military shipments) or the International Air Transport Association (IATA) Dangerous Goods Regulations or International Civil Aviation Organization (ICAO) (commercial shipments) are satisfied with respect to packaging, marking and labeling. The hazard class/division and description of a material as indicated on the shipping papers, displayed on the label (if any), and on the container or package containing the material must be the same. Any containers or packages that are improperly packed, incorrectly marked or damaged shall not be loaded until the discrepancy has been corrected.

4-5.3.1. Weight Requirements. Refer to NAVSEA SW020-AG-SAF-010, for weight certification of intermodal container shipments and BL weight requirements. Refer also to NAVSEA SW020-AG-SAF-010 for size and weight limitations established by various states.

4-5.4. SPECIAL LOADS. Emergency regulations concerning the transport of special loads are described in NAVSEA SW020-AG-SAF-010.

4-5.5. DRIVER'S RESPONSIBILITIES DURING LOADING OPERATIONS. The driver shall ensure that:

a. The vehicle is correctly positioned at the loading area.

b. The engine is shut off; never load with the engine running.

c. The motor vehicle is put in the parking gear, and the parking brake is securely set.

WARNING

One person shall remain in the cab of a diesel powered vehicle. The transmission shall be left in neutral and the parking brake applied. There is a possibility that a warm engine could self-start if the vehicle should roll.

d. The driver shall ensure that the wheels of the vehicle are properly chocked to prevent movement. A stand-alone trailer must always be chocked and have the mechanical brakes set. Approved chocks may be procured through commercial sources provided they meet the requirements of the Society of Automotive Engineers (SAE J 348), or they may be locally fabricated per NAVSEA Drawing 2642779.

e. Extreme caution is taken to keep any persons in the vicinity from smoking, lighting matches or carrying any flame producing device or lighted cigar, pipe or cigarette. These actions are prohibited.

f. Only nonferrous (non-sparking) metal tools are used.

g. The interior of the cargo space is free from any inwardly projecting parts such as protruding bolts, screws, or nails.

h. The floor of the motor vehicle is tight, and is lined with either nonmetallic material or nonferrous metals when required in accordance with the criteria set forth in paragraph 4-3.1(f).

i. Drivers of trucks will not back up before first checking for clearance and giving warning. If rear visibility is blocked by cargo or otherwise limited, guides will be used if available. Guides must be in view of the driver at all times. If guides are not available, the driver will dismount and check clearance before backing.

4-5.5.1. Loading of MILVAN Containers. The requirement for wheel chocks may be omitted during loading and unloading operations of MILVAN containers provided the following safety conditions are adhered to:

a. Prior to the start of any operation, the location where the vehicle is to be positioned must be identified and marked (e.g., paint, traffic cones, etc.).

b. Vehicle must be parked with parking brake engaged, and must remain in a stationary position throughout the MILVAN container loading and unloading operation. During such operations, the vehicle will be moved only when the MILVAN container rests firmly on the chassis or flatbed trailer and is locked in place. At that time, the driver will then move the vehicle only when given clearance to do so by the responsible ground crew personnel.

NOTE

Activities that do not have cranes capable of properly aligning containers onto pre-positioned motor vehicles, may be permitted to move the vehicle to position or set the container load onto the chassis or flatbed trailer. The driver will only move the vehicle when given clearance to do so by the responsible ground crew personnel.

c. The driver must be seated in the cab and remain in full control of the vehicle throughout the loading and unloading operation. The vehicle engine may be kept running during the operation.

d. A local standard operating procedure (SOP) will be generated containing these requirements, training requirements, NAVSEA OP 5 Volume 1 safety procedures as well as other station unique requirements, and must be approved by the activity's Commanding Officer.

Refer to chapter 8 for further detail on MILVAN containers.

4-5.6. CARGO HANDLING PRECAUTIONS. During loading, packages or containers of AA&E shall be placed carefully in the vehicle and secured so they do not slide, fall or shift during transit. Loading/unloading operations shall be under the direction of qualified personnel. Packages or containers of unloaded ordnance shall be placed a sufficient distance from the exhaust tail pipe of the vehicle to prevent sparks or hot gases from igniting the material when the motor is restarted. Packages or containers shall not be thrown, dropped, slid, pulled or tumbled while they are being loaded or unloaded, although the sliding and pulling of long ordnance items may be necessary.

4-5.7. FORBIDDEN MATERIAL. A complete list of materials forbidden for transport by motor vehicle is provided in 49 CFR 173.54.

4-5.8. CARGO COMPATIBILITY. The driver shall ensure that explosives bearing different hazard classifications are properly segregated. If a load consists of more than one type of A&E, the shipping inspector shall ensure that only compatible explosives are shipped together and only in authorized quantities (refer to tables 4-1 and 4-2). This requirement also applies to A&E transported within a dromedary. However, the A&E loaded in the dromedary and the A&E loaded in the vehicle's cargo space may be incompatible, except as indicated in 49 CFR 177.835(c). This is the shipping inspector's responsibility. Drivers shall make a visual check as an added precaution. Refer to figure 4-2.

Table 4-1. General Compatibility Requirements for Hazardous Material Loaded on and Transported by Motor Vehicle Over Public Highway, or Loaded on and Transported by Rail

Class or Division	Notes	1.1 1.2	1.3	1.4	1.5	1.6	2.1	2.2	2.3 gas zone A	2.3 gas zone B	3	4.1	4.2	4.3	5.1	5.2	6.1 liquids PG I zone A	7	8 liquids only
Explosives . . . . . .1.1 and 1.2	A	*	*	*	*	*	X	X	X	X	X	X	X	X	X	X	X	X	X
Explosives 1.3		*	*	*	*	*	X		X	X	X		X	X	X	X	X		X
Explosives 1.4		*	*	*	*	*	O		O	O	O		O				O		O
Very insensitive explosives 1.5	A	*	*	*	*	*	X	X	X	X	X	X	X	X	X	X	X	X	X
Extremely insensitive explosives 1.6		*	*	*	*	*													
Flammable gases 2.1		X	X	O	X				X	O							O	O	
Non-toxic, non-flammable gases. 2.2		X			X														
Poisonous gas zone A 2.3		X	X	O	X		X				X	X	X	X	X	X			X
Poisonous gas zone B 2.3		X	X	O	X		O				O	O	O	O	O	O			O
Flammable liquids 3		X	X	O	X				X	O					O		X		
Flammable solids 4.1		X			X				X	O							X		O
Spontaneously combustible materials 4.2		X	X	O	X				X	O							X		X
Dangerous when wet materials 4.3		X	X		X				X	O							X		O
Oxidizers 5.1	A	X	X		X				X	O	O						X		O
Organic peroxides 5.2		X	X		X				X	O							X		O
Poisonous liquids PG 1 zone A. 6.1		X	X	O	X		O				X	X	X	X	X	X			X
Radioactive materials 7		X			X		O												
Corrosive liquids. 8		X	X	O	X				X	O		O	X	O	O	O	X		

Numbers and symbols shown in this table are defined as follows:

The absence of any hazard class or division or a blank space in the table indicates that no restrictions apply.

The letter “X” in the table indicates that these materials may not be loaded, transported, or stored together in the same transport vehicle or storage facility during the course of transportation.

O - indicates that these materials may not be loaded, transported, or stored together in the same motor vehicle, rail car, or storage facility during the course of transportation, unless separated in a manner that, in the event of leakage from packages under conditions normally incident to transportation, commingling of HAZMAT would not occur. Notwithstanding the methods of separation employed, Class 8 (corrosive) liquid materials may not be loaded above or adjacent to Class 4 (flammable solid) materials or Class 5 (oxidizing) materials, except that shippers may truckload shipments of such materials together when it is known that the mixture of contents would not cause a fire or a dangerous evolution of heat or gas.

* - indicates that segregation among different Class 1 (explosive) materials is governed by table 4-2.

A - means that, notwithstanding the requirements of the letter "X", ammonium nitrate (UN 1942) (on public highway) and ammonium nitrate fertilizer (on public highway or rail) may be loaded or stored with Division 1.1 (Class A explosive) or Division 1.5 (blasting agents) materials.

Table 4-2. Compatibility Requirements for Class 1 (Explosive) Materials Loaded on and Transported by Motor Vehicle Over Public Highway or by Railcar

Compatibility Group	A	B	C	D	E	F	G	H	J	K	L	N	S
A		X	X	X	X	X	X	X	X	X	X	X	X
B	X		X	X(4)	X	X	X	X	X	X	X	X	4/5
C	X	X		2	2	X	6	X	X	X	X	3	4/5
D	X	X(4)	2		2	X	6	X	X	X	X	3	4/5
E	X	X	2	2		X	6	X	X	X	X	3	4/5
F	X	X	X	X	X		X	X	X	X	X	X	4/5
G	X	X	6	6	6	X		X	X	X	X	X	4/5
H	X	X	X	X	X	X	X		X	X	X	X	4/5
J	X	X	X	X	X	X	X	X		X	X	X	4/5
K	X	X	X	X	X	X	X	X	X		X	X	4/5
L	X	X	X	X	X	X	X	X	X	X	1	X	X
N	X	X	3	3	3	X	X	X	X	X	X		4/5
S	X	4/5	4/5	4/5	4/5	4/5	4/5	4/5	4/5	4/5	X	4/5	

Numbers and symbols shown in this table are as follows:

A blank in the table indicates that no restrictions apply.

For motor vehicles the letter “X” in the table indicates that explosives of different compatibility groups may not be carried on the same transport vehicle. For railcars the letter “X” indicates that explosives of different compatibility groups may not be carried on the same railcar unless packed in separate freight containers (e.g. two or more freight containers mounted upon the same railcar).

1 - means explosives from compatibility group L may only be carried on the same motor vehicle or railcar with an identical explosive.

2 - means any combination of explosives from compatibility group C, D, or E is assigned to compatibility group E.

3 - means any combination of explosives from compatibility group C, D, or E with those in compatibility group N is assigned to compatibility group D.

4 - means detonators and detonating primers, Division 1.4S (Class C explosives), may not be loaded in the same railcar with Division 1.1 and 1.2 (Class A explosive) materials as described in 49 CFR 174.81 (g)(3)(iv). Also, see 49 CFR 177.835 (g) for restrictions of detonator assemblies, boosters with detonators, and detonators on public highway.

5 - means Division 1.4S fireworks may not be loaded in the same motor vehicle or rail car with Division 1.1 or 1.2 (Class A explosive) materials.

6 - means explosive articles in compatibility group G, other than fireworks and those requiring special stowage, may be stowed with articles of compatibility groups C, D and E, provided no explosive substances are carried in the same vehicle.

4-5.9. PROTECTION AGAINST SHIFTING CARGO. All cargo carrying motor vehicles shall have the load securely fastened or braced, and shall be provided with front-end structures or similar devices of sufficient strength to prevent cargo shifting and possible cab penetration. Load shifting can be controlled by proper blocking and bracing. Forward movement in closed vans can be controlled by placing the cargo against a front bulkhead that prevents longitudinal and latitudinal movement. Lateral movement in closed vans can be controlled by sleepers nailed to the floor. Rearward movement in closed vans can be controlled by a rear gate or rear blocking. On flatbed trailers, however, all cargo must be restrained without the use of front-end structure or side walls. Flatbed vertical movement is controlled by securing the cargo with over-the-road steel strapping, web strapping (see NAVSEA SW020-AG-SAF-010), or chains and binders (tiedowns). A minimum of two tiedowns shall be used to secure each cargo stack. Truckloading methods are specified in NAVSEA SW023-AG-WHM-010 for on-station movements and MIL-STD-1320 (series), approved NAVSEA drawings, or U.S. Army drawings approved and adopted by the Navy for off-station movements.

4-5.10. LOADS CONSISTING OF HAZARDOUS MATERIALS AND INERT MATERIALS. If the load consists of A&E and inert materials, the shipping inspector shall ensure that the highest hazard is loaded last. If A&E is loaded forward of inert materials, a placard shall be placed on the inside of the van door which states “Hazardous Material Forward.” In all cases, adherence to blocking and bracing procedures is mandatory.

4-6. INSPECTION PRIOR TO RELEASE OF LOADED MOTOR VEHICLE.

4-6.1. DRIVER’S RESPONSIBILITY. AA&E loaded vehicles will be inspected and sealed by responsible personnel in accordance with station standard operating procedures. Except in cases involving pre-loaded and sealed closed van-type trailers, where practicable, the drivers shall be responsible for checking the following items of inspection before moving the loaded vehicle:

a. Containers. Drivers shall inspect the cargo to ensure that no containers are leaking, broken or appear so weak that breakage could occur during normal shipment.

b. Gross Vehicle Weight and Load Distribution. Ensuring that the gross vehicle weight and load distribution meet state maximum limits is primarily the responsibility of the load planner, the load crew personnel, and the load crew supervisor. The driver shall verify that the load does not exceed maximum weight and distribution limits for the states through which the shipment is to be routed. A loaded motor vehicle that exceeds a state’s gross vehicle weight limit and/or has an improperly balanced load will not be released off-station.

c. Proper Blocking and Bracing of Load. The driver shall inspect the load to ensure that it is braced and blocked securely and will not shift during transit. The load shall be stored in the motor vehicle per MIL-STD-1320 (Navy) and NAVSEA SW023-AG-WHM-010. These documents shall be available in the transportation officer’s or safety officer's office, or other authoritative sources as applicable.

d. Cargo Identification. The driver shall inspect the shipping documents and compare them with placards on the motor vehicle. The BL shows required placards. It is the duty of the driver to ensure that the motor vehicle is placarded in compliance with DOT regulations for the shipment of A&E; and,

according to the type of material being transported. The driver shall also check that the type and quantity of the load agrees with the BL.

e. Vehicle Sealing. The driver shall be certain that the cargo access doors of closed conveyances are secured with DOD approved serialized bolt seals attached to the door closure mechanism. Cable lock seals may be used for additional security. A ball-type seal, embossed with the letters U.S. and serially numbered, may be used with a wire-twist security device when bolt or cable seals are not readily available or when the door closure mechanism does not permit their use. Refer to paragraph 4-8 through 4-8.2 for further detail on security seal requirements.

4-6.2. INSPECTOR'S RESPONSIBILITY. Prior to releasing the motor vehicle to the carrier for movement, the shipping inspector shall check the following:

a. Marking and labeling of packages and containers per MIL-STD-129, and other applicable regulations to include Performance Oriented Packaging (POP) marking.

b. Cargo compatibility and arrangement of mixed loads.

c. Waste material and loading equipment have been removed from the motor vehicle.

d. Serviceability of motor vehicle fire extinguisher and other equipment.

e. Placement of shipping documents.

f. Placards are appropriate for the hazard of the explosive material offered for transportation and are affixed per 49 CFR or international directives.

g. Security seals, seal notices, wire twists (as applicable) are applied.

h. Explosive motor vehicle drivers have received emergency response instructions and proper reporting procedures for accidents, incidents or delays en route. Shipping papers shall be annotated with the emergency response statement as follows:

> "THE EMERGENCY RESPONSE INFORMATION FOR THIS HAZARDOUS SHIPMENT IS INDEXED BY THE UNITED NATION (UN) NUMBER ____ AND IS LOCATED IN THE NORTH AMERICAN EMERGENCY RESPONSE GUIDEBOOK, P5800.6."

i. BL and other applicable shipping papers are properly annotated with all pertinent data for the item being shipped: DOT transportation data, UN serial number, DOT Special Permit number, CAA's or COE's if applicable, net explosive weight and corresponding pieces, weight and cube, etc.

j. Shipment is loaded, blocked and braced per approved MIL-STD (WR) slash sheets or approved NAVSEA drawings.

4-7. PLACARDING.

Every motor vehicle transporting Class/Division 1.1 through 1.4 explosives, oxidizers, flammable materials, corrosives, compressed gases, poisons, or radioactive materials off-station or on-station shall be properly placarded per table 4-3 and the requirements outlined in paragraphs 4-7 through 4-7.5. An exception to this requirement is for vehicles carrying Class/Division 1.4, 1.5 and 1.6 A&E containing an aggregate gross weight of less than 1,001 pounds (454 kg). Additionally, the explosive 1.4 placard is not required for those Division 1.4 Compatibility Group S (1.4S) materials that are not required to be labeled 1.4S. A motor vehicle must be placarded with the highest hazard of material being transported. Vehicles engaged in towing explosive-loaded bomb trailers shall display appropriate placards or a red flag. The explosives driver is responsible for ensuring that the appropriate placards are installed on the motor vehicle before it is moved.

4-7.1. SIZE AND SHAPE. Each placard shall be diamond shaped with the overall dimensions, colors and height for the letters and necessary symbols as specified in 49 CFR 172.519 through 172.560 and associated appendices A through C. The placards required for each type of A&E shipment are listed in table 4-3.

4-7.2. LOCATION AND DISPLAY. The placards on a motor vehicle, portable tank or cargo container shall be placed on the front, rear and each side in an area that has no other marking, lettering or graphic display for at least three inches in each direction. The front placard for a motor vehicle may be displayed on the front of the truck, truck body, truck tractor or the trailer, and shall be clearly visible when approaching the vehicle from the front.

Each placard must:

a. Be securely attached to or placed in a holder made as recommended in 49 CFR 172(F). However, the holding device shall not obscure any part of the placard other than its border.

b. Be located clear of equipment and devices such as pipes, ladders, doors and tarpaulins.

c. So far as practical, be located so that dirt or water is not directed to it from the wheels of the transport vehicle.

d. Have its print displayed horizontally, reading from left to right. The placards must be maintained by the driver so that the format, legibility, color and visibility of the placard will not be substantially reduced due to damage or deterioration, or be obscured by dirt or other matter. No sign or other device that by its color, design, shape or content could be confused with any prescribed placard may be attached or displayed on any motor vehicle, portable tank or cargo container transporting A&E.

e. Be clearly visible to personnel or vehicles approaching the loaded conveyance.

f. Not be applied directly to the A&E on flatbed vehicles. If appropriate space is not available, placard holders must be used.

4-7.3. PLACARDING LOADS CONTAINING ONE TYPE OF A&E. The A&E listed in section 1 of table 4-3 requires the placards specified when transporting any quantity of that type of cargo. The A&E listed in section 2 requires the placards specified when transporting 1,001 pounds or more of that type of cargo, except when it is transported in portable tanks.

Table 4-3. Placarding Requirements for Motor Vehicles and Railcars

Category of material (Hazard class or division number and additional description, as appropriate)	Placard Name	Placard Design section reference (§)
SECTION 1		
1.1	EXPLOSIVES 1.1	172.522
1.2	EXPLOSIVES 1.2	172.522
1.3	EXPLOSIVES 1.3	172.522
2.3	POISON GAS	172.540
4.3	DANGEROUS WHEN WET	172.548
5.2 Organic peroxide, Type B, liquid or solid, temperature controlled).	ORGANIC PEROXIDE	172.552
6.1 (inhalation hazard, Zone A or B)	POISON INHALATION HAZARD	172.555
7 (Radioactive Yellow III label only)	RADIOACTIVE[1]	172.556
[1]RADIOACTIVE placard also required for exclusive use shipments of low specific activity material and surface contaminated objects transported in accordance with para 173.427(a) of this subchapter.		
SECTION 2		
Category of material (Hazard class or division number and additional description, as appropriate)	**Placard Name**	**Placard Design section reference (§)**
1.4	EXPLOSIVES 1.4	172.523
1.5	EXPLOSIVES 1.5	172.524
1.6	EXPLOSIVES 1.6	172.525
2.1	FLAMMABLE GAS	172.532
2.2	NON-FLAMMABLE GAS	172.528
3	FLAMMABLE	172.542
Combustible liquid	COMBUSTIBLE	172.544
4.1	FLAMMABLE SOLID	172.546
4.2	SPONTANEOUSLY COMBUSTIBLE	172.547
5.1	OXIDIZER	172.550
5.2 (Other than organic peroxide, Type B, liquid or solid, temperature controlled).	ORGANIC PEROXIDE	172.552
6.1 (Other than inhalation hazard, Zone A or B)	POISON	172.554
6.2	(None)	. . . . .
8	CORROSIVE	172.558
9	Class 9 (see §172.504(f)(9)	172.560
ORM-D	(None)	. . . . .

NOTES:

(1) The dotted line border shown on each placard is not part of the placard specification. However, a dotted or solid line outer border may be used when needed to indicate the full size of a placard that is part of a larger format or is on a background of a non-contrasting color.

(2) The "*" shall be replaced with the appropriate division number and, when required, appropriate compatibility group letter.

(3) On a COMBUSTIBLE placard with a white bottom as prescribed by 49 CFR 172.332 (c) (4), the class number must be red or black.

4-7.4. PLACARDING COMBINATION LOADS. A motor vehicle or cargo container loaded with two or more classes of materials requiring different placards specified in section 2 of table 4-3, may be placarded DANGEROUS in place of the separate placarding specified for each of those classes of materials. However, when 2,205 pounds or more of one class or material is loaded at one activity, the placard specified in section 2 of table 4-3 for that material is required. No placard is required on a motor vehicle or cargo container transported by highway only; and, containing less than 1,001 pounds (aggregate gross weight) of one or more of the materials listed in section 2 of table 4-3. Shipments of Class/Division 1.1 through 1.3 A&E in the same transport vehicle require Class/Division 1.1 placards only. When a vehicle contains any quantity and combination of A&E listed in section 1 of table 4-3, such as Class/Division 1.1 through 1.3 A&E, poison 6.1 and/or radioactive yellow III labeled materials, it shall display all the appropriate placards as specified in table 4-3. When two or more vehicles in tandem are transporting A&E, each shall be placarded according to its contents.

4-7.5. PLACARDING OF TANK MOTOR VEHICLES. These motor vehicles shall be placarded in the same manner as previously described with the following additions:

a. The placard shall not be displayed unless the motor vehicle is carrying a commodity classified as A&E.

b. Tank motor vehicles transporting gasoline may be placarded GASOLINE instead of FLAMMABLE; however, a placard of the appropriate size, shape and color must be used.

c. When flammable compressed gas is being carried, the tank motor vehicle shall be placarded FLAMMABLE GAS. When the gas is not flammable, NON-FLAMMABLE GAS placards shall be used. In each case, the placard shall conform to DOT regulations.

4-8. SEALS.

When sensitive AA&E is loaded aboard closed conveyances (DROM; ISO/MILVAN/CONEX; motor vehicle trailer; boxcar), the shipper shall ensure that the doors to those conveyances are sealed with a DOD approved numbered (serialized) security seal (see paragraphs 4-8.1). Seal numbers must be annotated on the BL. This standing rule applies to both TL and LTL/DROM shipments. All AA&E shipments moving in MILVAN/ISO containers configured with a customs catch plate door design (see figure 4-4) shall have a security seal applied to both the left and right door. In these situations, both security seal numbers should be recorded on the BL. Refer to DTR 4500.9-R for further detail.

4-8.1. DOD APPROVED SEALS. The cargo access doors of closed conveyances used for transporting sensitive AA&E shall be secured with DOD approved serialized bolt seals (NSN 5340-01-260-9935). For additional security, a cable lock seal (NSN 5340-00-084-1570) may also be used (see figure 4-5). Other security seals may be substituted provided they meet Federal Specification FF-S-2738 (Antipilferage Seals) requirements. The ball-type seal, embossed with the letters U.S. and serially numbered (NSN 5340-00-081-3381) may be used with a wire-twist security device (see paragraph 4-8.2) when bolt or cable seals are not readily available or when the door closure mechanism does not permit their use. Local, organic shipments of Class/Division 1.1 through 1.4 A&E may be transported using an approved padlock (NSN 5340-01-348-9430) and serialized ball seal, provided that the shipping activity's Standard Operating Procedures (SOP) reflects authorization for use of this alternative locking system.

Refer to paragraph 3-4.5 for requirements governing the use of accompanying seal notices and seal tags. Refer to NAVSEA SW020-AG-AF-010 for additional information on security seals.

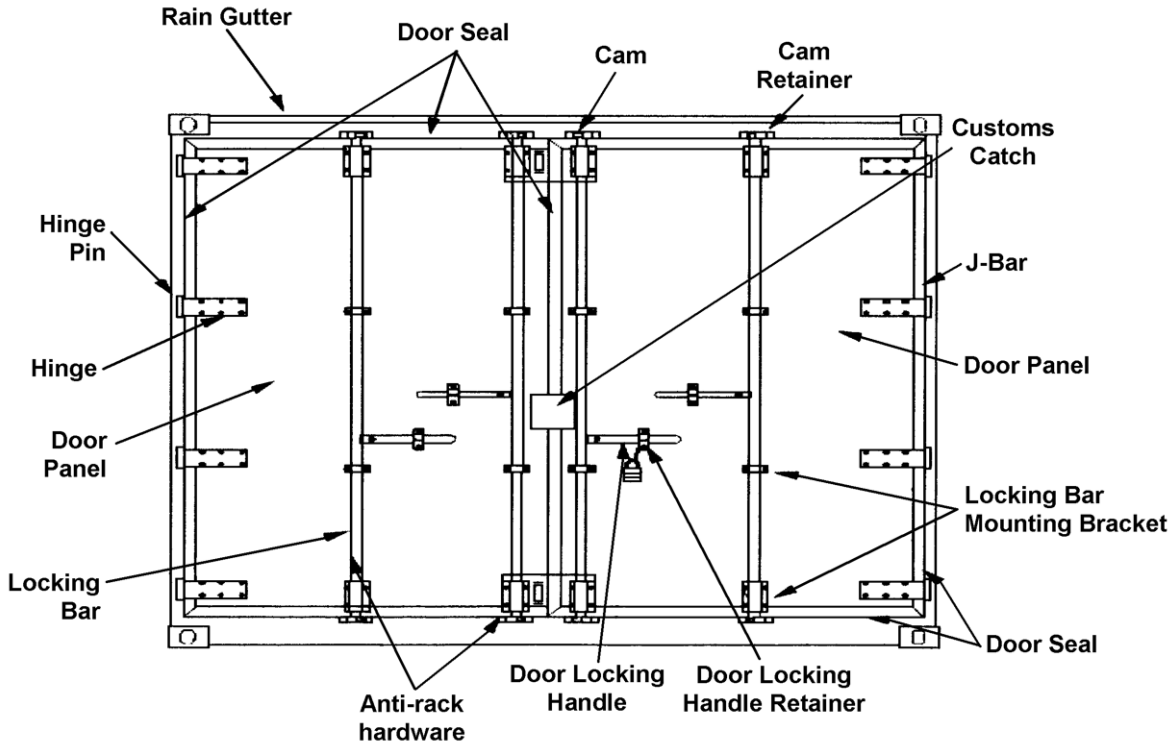

FIGURE 4-4. Rear End Door Assembly with Customs Catch Plate

4-8.2. WIRE SECURITY DEVICE. A number 5, American wire gauge steel wire twist, or a wire cable of larger or equivalent thickness together with a ball-type seal, will be used to secure door hasps if cable seal locks or other types of serialized seal locks are not available. The wire shall be procured by the coil, cut in 12-inch to 18-inch lengths and bent into a "U" shape. The wire security device shall be installed through the door locking or closing mechanisms and twisted with an appropriate twisting tool. The tool can be fabricated from a piece of steel bar stock with two holes 2-1/2 inches apart, drilled one drill size larger than the wire gauge used. The wire shall be twisted a minimum of two complete turns and the ends cut off close to the twist. The wire can be removed by the receiving activity by cutting it with an appropriate wire or bolt cutting tool. Nails, bolts, copper wire or any other degraded security devices are not to be used in lieu of this twisted steel wire. Figure 4-6 shows typical applications of the wire security device on motor vehicles and MILVAN containers. After applying the wire security device to the motor vehicle doors, the DD Form 836 or emergency response guidesheet will be annotated to read "Wire security device applied to doors. Do not use explosive-actuated or flame or heat-producing cutters to remove." The notation "wire twist applied" with the number of attached seals shall also be annotated on the BL.

4-9. COMPLETION OF MOTOR VEHICLE INSPECTION.

After satisfactory completion of the inspections cited in paragraphs 4-6 through 4-8, and prior to releasing the motor vehicle to the carrier, the inspector shall complete the last portion of the DD Form

626. Both the shipping inspector and the driver must sign the DD Form 626. Sufficient copies of the form shall be prepared for distribution as detailed in NAVSEA SW020-AG-SAF-010. All deficiencies shall be corrected before the motor vehicle is released to the carrier for shipment to the destination.

4-10. SHIPPING PAPERS/WRITTEN INSTRUCTIONS TO DRIVERS.

Prior to departure, the driver of a motor vehicle containing AA&E and each carrier using a vehicle shall have in their possession the shipping papers outlined in paragraph 3-4 of this manual. A written route plan, and any other papers required for a subsequent mode of transportation, i.e. trailer on a flatcar (TOFC), container on flatcar (COFC), air or water, as applicable, shall also be in the driver's possession at all times throughout the period of off-post transit, from origin to destination. Together, these documents describe the hazardous nature of the cargo; attest to the serviceability of the conveyance; provide emergency response instructions; and protect shipment integrity by providing a means for documenting the in-transit custody transfer of the cargo from one driver to the next.

Shipping papers shall be clearly distinguishable from any other papers carried, and must be readily accessible to the driver and authorities in the event of accident, incident or inspection. When the driver is at the vehicle controls and is restrained by a seat belt, the papers shall be within the driver's immediate reach. The papers shall be either readily visible to a person entering the driver's compartment, or in a holder mounted to the inside of the door on the driver's side. When the driver is not at the vehicle controls, the papers shall be in the door holder or on the driver's seat.

4-10.1. SPECIAL WRITTEN INSTRUCTIONS FOR OCONUS MOVEMENTS. Special written instructions concerning shipments of AA&E to water and air transshipment ports of embarkation are discussed in DTR 4500.9-R, Chapters 203 and Chapter 205. DTR 4500.9-R provides instructions for the completion of shipping papers for OCONUS shipments and for preparation of the Transportation Control and Movement Document (TCMD).

FIGURE 4-5. Proper Placement of Cable Seal Locks

NOTE

Personal protective equipment (i.e. gloves) shall be used when performing this function.

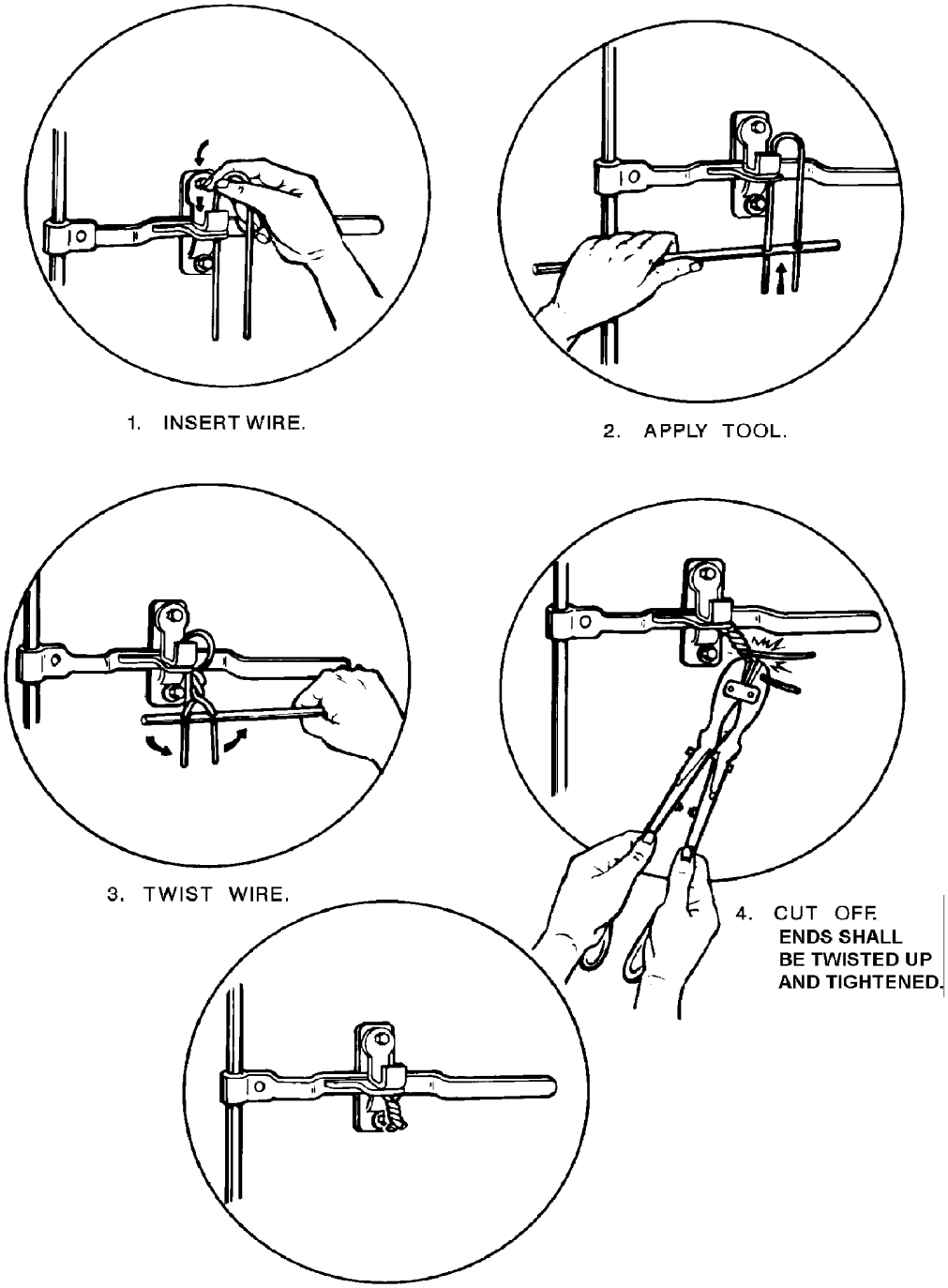

FIGURE 4-6. Application of Wire Security Device for Motor Vehicles and MILVAN Container Shipments

4-10.2. DANGEROUS GOODS CERTIFICATIONS. Dangerous goods certification instructions for shipments via military air are addressed in AFMAN 24-204/NAVSUP Pub 505. Consult International Civilian Aviation Organization (ICAO) Technical Instructions, and International Air Transport Association (IATA) Dangerous Goods Regulations for certification requirements for commercial air shipments. The International Maritime Dangerous Goods (IMDG) Code provides instructions for the documentation of dangerous goods for water shipments. Each of the aforementioned regulations provide instructions for completing dangerous goods certification papers, which convey the basic information relative to the hazards of the goods being offered for transportation, emergency response instructions; and a declaration that the goods are accurately described, packaged, marked and labeled according to applicable international and national government regulations.

4-10.3. TRANSPORTATION FACILITIES GUIDE. Finally, in addition to the above written instructions to drivers per each shipment, DON shore activities having missions involving the receipt, storage, and issue of AA&E must ensure that relevant instructions detailed in the SDDC Transportation Facilities Guide (TFG) are current. The TFG provides an additional source of information to carriers and their drivers with respect to an installation's receipt procedures, Class 1 A&E local routing, secure holding capability, and procedures for after-hour deliveries (see DTR 4500.9-R and NAVSEA SW020-AG-SAF-010 for details).

4-11. ROUTES/ROUTE PLANS.

Per 49 CFR 397.67, prior to departing from the activity, the driver shall present a written plan of the prescribed route. The route, established by cognizant authority, shall not be changed except in cases of emergency. Deviations shall not be made except as follows:

a. On the direct orders of local law enforcement authorities.

b. Following accidents, incidents or breakdowns in which damage to the motor vehicle justifies towing (after unloading) to another locality.

c. On the direct order of the CO, safety officer, ordnance officer, or their designated representatives.

d. When dangerous electrical storms are encountered.

e. When detours have been established by traffic authorities.

f. When safe haven is required during a civil disturbance or natural disaster, as defined in paragraph 5-5.4.

NOTE

Drivers shall not divulge the route of the movement or the nature of the cargo to any unauthorized person. Above all, drivers shall not discuss the above over CB or similar radio communications, telephone, or in personal conversation at fuel or eating stops.

CHAPTER 5

IN-TRANSIT REGULATIONS FOR MILITARY MOTOR VEHICLES

5-1. INTRODUCTION.

This chapter identifies the in-transit regulations applicable to Navy and Marine Corps explosives drivers transporting arms, ammunition, explosives and related hazardous materials (AA&E). The following information is included:

a. Driving regulations, hazards and safety measures.

b. Protecting the security of the load.

c. Inspection in-transit.

d. Procedures for accidents, breakdowns, burning-area operations, delays, repacking, refueling and parking.

e. Procedures for water transportation.

f. Heavily populated areas.

g. Safe haven.

5-2. DRIVING REGULATIONS.

Driving regulations and safe driving guidelines particularly applicable to the explosives driver are presented in the following paragraphs.

5-2.1. SPEED REGULATIONS. Drivers of motor vehicles transporting AA&E must adhere to the posted speed limits peculiar to each state, county, or municipal roadway system. The posted speed limit for a given roadway system within each state may vary with respect to cars and trucks. In addition, some states have established separate maximum speed limits for trucks transporting Hazard Class 1 ammunition, explosives and related hazardous materials (A&E). Drivers shall be attentive to applicable speed limit requirements within each state and locality when transporting A&E off-station.

5-2.2. MINIMUM SPEEDS. No motor vehicle shall be driven at a speed so slow that it will unnecessarily impede or block the normal and reasonable movement of traffic or violate minimum state or local speed requirements.

5-2.3. DRIVING HOURS. Explosives drivers shall not be required to drive for periods exceeding the customary 8-hour day, except in extreme emergency or when relief is not available. Per 49 CFR 395.3, no driver shall drive more than 11 hours following 10 consecutive hours off duty; nor shall a driver drive

for any period after having been on duty 14 hours following 10 consecutive hours off duty. If approved by the originating activity, a driver may be given travel directions by another activity during the 8-hour period.

5-2.3.1. Driving Distances (Government Owned Vehicles). The Permissible Operating Distance (POD) established for government-owned vehicles within the continental United States (CONUS) is 100 miles or less one-way. Refer to NAVSEA SW020-AG-SAF-010 for further detail on the regulations and limitations regarding the use of government-owned vehicles to transport DOD freight.

5-2.4. DRUNKEN AND RECKLESS DRIVING. Explosives drivers shall never operate any vehicle while under the influence of alcohol, illegal drugs or a derivative of a narcotic drug, or the misuse of a prescription drug. Motor vehicles shall not be driven recklessly or in such a manner as to endanger life, limb or property. No motor vehicle may be driven at a speed greater than is reasonable and prudent for the type of vehicle, visibility, traffic and road conditions. The following is quoted from the Uniform Code of Military Justice (UCMJ), Article 111, and is applicable to military personnel: "Any person subject to this code who operates any vehicle while drunk, or in a reckless or wanton manner, shall be punished as a court-martial may direct." Civilian drivers are subject to all local laws when suspected of drunken or reckless driving. Drivers are subject to disciplinary actions and penalties as outlined in paragraph 2-6.

5-2.5. ARREST. If arrested, the driver (military or civilian) shall notify his/her home station immediately. If possible, the driver's immediate supervisor shall be contacted as well.

5-2.6. GENERAL RULES FOR SAFE DRIVING. The following general rules shall be observed by the explosives driver:

a. Observe and obey all road signs.

b. Maintain safe clearance for bridges and tunnels as posted.

c. Exercise caution when overtaking, meeting or being passed by other vehicles.

d. Use hand signals or directional lights when passing or turning.

e. Exercise caution when passing a stationary streetcar or bus, if local regulations permit such passing.

f. Exercise caution when approaching emergency vehicles.

g. Exercise caution when backing or maneuvering.

h. Exercise caution when stopping or parking.

i. Observe right-of-way regulations.

j. Be certain vehicle and cargo are secure.

k. Maintain a safe following distance for traffic and road conditions.

l. Exercise caution when near or passing an open fire.

m. Wearing portable headphones, earphones, or other listening devices while operating a motor vehicle is prohibited.

n. Drivers shall understand and obey all local civil regulations, as well as any on-station regulations, concerning the use (or restricting the use) of cell phones in a moving vehicle. Drivers shall always exercise caution when operating cell phones, "hands free devices," or global positioning systems, and whenever possible, use these devices only when the vehicle is safely stopped.

5-2.7. ROAD SIGNS. Road signs used in the United States conform with international agreements.

5-2.8. YIELDING RIGHT OF WAY. Ambulances, firefighting equipment, police, and similar emergency vehicles using warning lights and/or sirens, shall have the right of way over all other traffic, including vehicles carrying AA&E. Military formations, whether at a halt or in motion, have the right of way at all times. Drivers shall exercise caution when passing or approaching such formations.

5-2.9. INSTRUCTIONS FOR SPECIFIC SITUATIONS. Procedures to be followed by the driver with respect to tunnels, railroad crossings, convoys, bridges, heavily populated areas and stops are presented in the following paragraphs:

5-2.9.1. Tunnels. Vehicles transporting A&E shall not be routed through tunnels if it can be avoided. If it becomes absolutely necessary to use tunnels, the driver shall:

a. Contact the local police to obtain permission.

b. Request advice from the local law enforcement authorities on existing laws.

c. Comply with written instructions that shall include authorization to use the tunnel as arranged by the cognizant naval activity.

d. Advise the proper local authorities and the originating activity if unable to meet the scheduled time for use of a tunnel.

5-2.9.2. Railroad Crossings. Drivers of vehicles carrying AA&E shall exercise extreme caution when approaching railroad crossings. All drivers shall, when approaching any railroad crossing, use the four-way flashers 300 feet from the tracks and slowly come to a full stop not more than 50 feet from, nor closer than 15 feet to, the nearest rail of the crossing. The driver will look in both directions and shall not proceed until he/she is certain that all tracks are clear. Full stops need not be made at:

a. Street car crossings in a town's business or residential district.

b. Railroad grade crossings where a police officer or a crossing watchperson directs the traffic to proceed.

c. Abandoned or exempted grade crossings marked by, or with the consent of, the proper state authority. The marking shall be clearly visible from the driver's position in the cab of the vehicle.

5-2.9.3. Convoys. In motor vehicle convoys, drivers shall not become widely separated, but shall maintain a safe distance between vehicles. Generally, the safe distance shall not be greater than 300 feet; however, vehicles should not be less than 50 feet apart.

5-2.9.4. Bridges. A motor vehicle transporting AA&E shall approach a drawbridge slowly so that a stop may be made safely before the lip of the drawbridge is reached. The driver shall proceed only when the drawbridge is completely closed; and, if traffic signals are present, when the signal is green. When a prescribed route includes toll bridges, the driver shall be advised of this fact in advance of travel. The driver shall:

a. Contact local toll bridge authorities from the starting point; or, at the most convenient scheduled stopping point along the route; or, obtain permission to use the facilities and information regarding special regulations.

b. Cooperate with local authorities by providing them with any information required regarding the vehicle's load and schedule. Follow their instructions concerning the movement of the vehicle over the bridge.

c. Take note of any special directions contained in the written instructions that shall include authorization to use the bridge as arranged by the cognizant activity.

5-2.9.5. Heavily Populated Areas. Per 49 CFR 397.67(a) and (b), a motor vehicle carrying placarded cargo shall be operated over routes that do not go through or near heavily populated areas, places where crowds are assembled, tunnels, narrow streets, or alleys. Drivers shall comply with all state and municipal laws and ordinances. Exceptions to this general rule are as follows:

a. There is no practicable alternative.

b. A reasonable deviation is necessary to reach terminals, points of loading or unloading, facilities for food, fuel, rest, or safe haven.

c. A reasonable deviation is required in response to emergencies as determined by local emergency response officials.

Operating convenience is not a basis for failing to avoid heavily populated areas.

In response to a confirmed case of military necessity or with respect to emergency operations conducted by Explosive Ordnance Disposal (EOD) personnel, Navy/Marine Corps owned motor vehicles carrying A&E may be required to travel through or near populated areas. In this case, the driver shall contact local law enforcement authorities to advise them of the proposed trip before approaching the perimeter of the municipality. The driver will follow the routing instructions provided by the law enforcement authorities, which may include police escort.

5-2.9.6. Stops. When transporting AA&E, drivers shall make no unscheduled stops except in an emergency. The vehicle shall not be left unattended at anytime.

5-3. DRIVING HAZARDS.

The transportation of A&E by any method is extremely dangerous. All rules for road safety shall be carefully studied and practiced by explosives drivers. Some of the more common hazards may be avoided or minimized by applying the information presented in paragraphs 5-3.1 through 5-3.3.

5-3.1. CARBON MONOXIDE. Carbon monoxide is a deadly gas that kills quickly and without warning if inhaled in sufficient quantities. In small amounts it causes drowsiness that results in dangerous inattention by the driver on the highways. The following safety measures shall be taken to prevent carbon monoxide gas from escaping into the vehicle:

a. The engine shall be kept in good condition. Engines and undercarriages shall be kept free of excessive oil and grease.

b. The manifold shall be inspected for leaks in the parts, the exhaust pipe and muffler.

c. The driver shall not leave the engine running while parked.

5-3.2. DAMAGE TO CARGO. One of the principal reasons for the careful inspection of containers loaded with A&E is to avoid the hazards of fire and explosion. A leaking or broken container of corrosives or acids can injure the driver by causing burns, fume poisoning or suffocation. Fires and explosions may also result from careless handling of the containers or from the shifting of an improperly dunnaged load.

CAUTION

Drivers shall avoid sharp braking during downhill travel. This operation is one of the principal causes of load shifting and usually results in damage to the cargo.

5-3.3. WEATHER CONDITIONS. Drivers shall be extremely cautious when weather such as snow, ice, sleet, fog, rain or electrical storms affect visibility or traction. If conditions become extremely hazardous, operation of the vehicle shall be temporarily discontinued. When compliance with these instructions increases hazards to road traffic, the vehicle shall be driven to the nearest military activity for safe haven.

5-4. SAFETY MEASURES.

While transporting AA&E, all safety regulations shall be strictly followed.

WARNING

Matches, lighters or other fire, flame, or spark-producing devices shall not be permitted within 25 feet of a motor vehicle loaded with A&E.

5-4.1. FLAME-PRODUCING DEVICES. No person shall carry a lighted cigarette, cigar or pipe, or any fire, flame or spark-producing device within 25 feet of a vehicle transporting A&E.

CAUTION

Explosives drivers shall adhere to DOT regulations and state and local laws governing the use of snow chains during inclement weather. Snow chains have the potential for creating sparks.

5-4.2. SMOKING REGULATIONS. Smoking is prohibited within 25 feet of the following:

a. A motor vehicle which contains Class 1 materials, Class 5 materials, or flammable materials classified as Division 2.1, Class 3, Divisions 4.1 and 4.2, or;

b. An empty tank motor vehicle which has been used to transport Class 3, flammable materials, or Division 2.1 flammable gases, which when used, was required to be marked or placarded per 49 CFR Part 172.500, Subpart F.

5-4.3. TRANSPORTING FLAMMABLES. Vehicles used for the transportation of flammables shall be kept clean and free of oily rags or similar combustible materials. Valves, nozzles and other connections on the vehicle shall be kept free of leaks and in good operating condition at all times.

5-4.4. EXPOSURE TO WEATHER. A&E shall not be exposed unnecessarily to the direct rays of the sun or to inclement weather, i.e. rain or electrical storms.

5-4.5. LOAD INTERFERENCE. No motor vehicle shall be operated if the cargo or any other object obscures the driver's view in any direction; interferes with the free movement of arms or legs; prevents free and ready access to equipment for emergencies; or, prevents the free and ready exit of the driver from the cab of the vehicle.

WARNING

Flares, fusees and signals that produce flame shall not be used as warning devices for disabled vehicles carrying A&E.

5-4.6. WARNING DEVICES. In the case of an accident, incident, breakdown or stop made for any reason on the public highways, a motor vehicle carrying A&E shall have three bidirectional emergency reflective triangles as warning devices to approaching traffic. These devices eliminate the need for flags and reflectors and are effective during the day or night.

5-4.6.1. Posting Warning Devices. Immediately upon stopping, the driver shall set the turn signals to flash simultaneously; and, place three red emergency reflective triangles on the traffic side of the vehicle per the following directions:

a. One warning device shall be placed 100 feet in front of the motor vehicle and one 100 feet in back of the vehicle in the center of the traffic lane it occupies. One warning device shall be placed on the traffic side of the vehicle not more than 10 feet from the front or rear of the vehicle. (See figure 5-1A.)

b. If the stop is made within 500 feet of the crest of a hill, a curve, or any object obstructing the vehicle from the view of approaching traffic, the warning devices shall be placed not less than 100 feet or more than 500 feet from the vehicle in the direction of the hill, curve or other obstruction. One warning device shall be placed on the traffic side of the vehicle not more than 10 feet from the front or rear of the vehicle. (See figure 5-1B.)

c. If the stop is made on any lane of a divided highway, one warning device shall be placed 200 feet in back of the stopped vehicle in the center of the traffic lane it occupies; one warning device shall be placed 100 feet in back of the vehicle in the center of the traffic lane it occupies; and, one warning device shall be placed on the traffic side of the vehicle within 10 feet from the rear of the vehicle. (See figure 5-1C.)

d. When any motor vehicle used in the transportation of AA&E is disabled or stopped entirely off the roadway on an adjacent shoulder, the warning devices shall be placed as near as practical on the shoulder at the edge of the roadway.

5-4.6.2. Picking Up Warning Devices. The driver shall ensure signals are flashing simultaneously before picking up the emergency warning devices from the highway.

5-5. PROTECTING THE SECURITY OF THE LOAD.

The driver shall be aware of security policies, procedures and responsibilities (see paragraphs 2-8 through 2-8.3). Most importantly, drivers shall be aware of, and adhere to, physical security requirements for their load per the established Force Protection Condition (FPCON), as prescribed in NAVSEA SW020-AG-SAF-010.

5-5.1. VEHICLE SECURITY. The doors of all motor vehicles containing AA&E shall be securely sealed and under constant surveillance when outside a restricted, fenced area. The only exception is when it is necessary to open the vehicle for inspection or to handle the contents. In this event, a responsible person shall be in charge of the vehicle. All doors on vehicles containing AA&E shall be closed securely before the vehicle is in motion. When open trucks are used, the load shall be protected from the sun and weather by waterproof, fire-resistant tarpaulins (see paragraph 4-2 and 4-2.4).

5-5.2. SEALS. Refer to paragraphs 4-8 and 4-8.1 regarding the requirements for transportation conveyance seals, seal notices (NAVSUP Form 407), and seal tags for AA&E shipments.

5-5.2.1. Breaking of Seals En Route. In the event that seals are broken or replaced en route, the driver shall notify the shipping activity or receiving activity immediately and request instructions concerning the security of the cargo prior to continuing to destination. Drivers shall remain with the vehicle at all times to protect the cargo until a new seal is applied. In the case of sensitive or classified shipments, the Commanding Officer (CO) of the nearest military installation shall be notified immediately so that qualified personnel can be dispatched, if required. At the destination, the proper authority shall inspect the cargo to ensure that no breach of security has been committed. If compromise of the load is suspected, the CO at the receiving activity will immediately notify the nearest field office of the Naval Criminal Investigative Service (NCIS) and NOSSA.

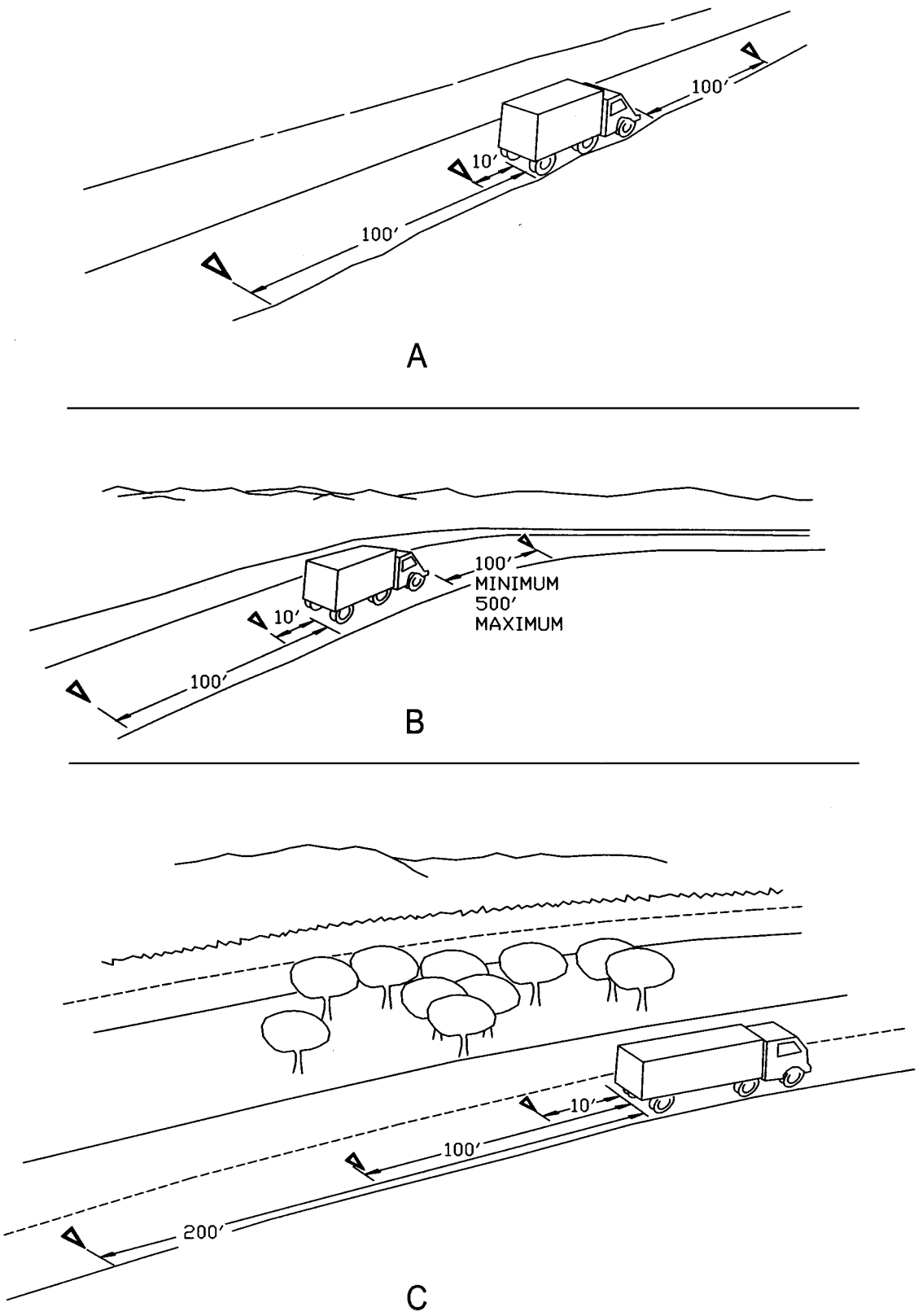

FIGURE 5-1. (A-C) Posting Warning Signals for Highway Stops

5-5.3. GUARDING VEHICLES. When outside a military station, the cargo doors of all motor vehicles containing AA&E shall be secured and motor vehicles shall be under constant surveillance. For off-station AA&E movements, in the context of the Navy's two-driver requirement, constant surveillance means (1) that a DD Form 1907 will be maintained; (2) that at least one driver will remain in the cab of the vehicle, or remain within 25 feet of the vehicle during brief stops, provided the vehicle is within full, unobstructed view. When vehicles are parked on-station in a barricaded area or in other assigned locations, their cargo doors shall be sealed and the ignition keys left in the vehicle, unless security considerations dictate that they be removed. When ignition keys are removed because of these considerations, they shall be made readily available to personnel assigned to move the vehicles. When trailers loaded with AA&E are parked without attached tractors, tractors will be made available for moving them. The ignition keys for these tractors shall be handled in the same manner as specified for AA&E loaded motor vehicles. The security of the cargo and the vehicle shall be the direct responsibility of the explosives driver while under the driver's custody. Drivers must be mindful of both the hazardous nature of the cargo and the Security Risk Category (SRC) assigned to the cargo. In cases where a courier is used, the courier shall be responsible for the cargo. The level of on- and off-station security surveillance over AA&E movements will vary according to the SRC of the AA&E and the existing local FPCON.

5-5.4. SAFE HAVEN. If a motor carrier engaged in the transport of DOD AA&E or other sensitive items encounters an emergency situation which will prevent the shipment from safely reaching its destination, the driver may request aid from local law enforcement or proceed directly to the nearest DON activity, which shall permit the motor carrier to park the impacted motor vehicle in the appropriate secure holding area. In the event that the quantity and hazard class/division of the shipment exceeds the ESQD limits sited for the secure holding area, or if the nearest DON activity does not have a sited secure holding area; the activity CO/OIC will provide temporary parking at an alternate site on-station that affords ESQD protection to the maximum possible extent in accordance with acceptable risk. SRC I and SRC II AA&E will be provided the level of physical security protection detailed in NAVSEA SW020-AG-SAF-010. The driver shall immediately report all pertinent information to the receiving activity. Safe haven is strictly temporary in nature. AA&E laden vehicles must be removed from the secure holding area as soon as practicable upon determination by the CO/OIC and/or appropriate civil authorities that the threat to the shipment's integrity has diminished.

5-6. INSPECTION IN TRANSIT.

Drivers must examine their vehicle tires at the beginning of each trip and each time the vehicle is parked. Vehicles shall be stopped and inspected at all specified check points en route. The requirement for operators of vehicles transporting AA&E to stop at specified intervals and check their tires was eliminated per the Federal Register of 4 Oct. 2002. The motor vehicle and cargo shall be inspected by the driver for the following:

a. General condition of the motor vehicle and clean placards.

b. Condition of the tires: A soft, flat or unusually hot tire must be repaired, replaced or properly inflated before the trip is resumed. An overheated tire shall be removed and placed a safe distance from the vehicle. The driver shall not operate the vehicle until the cause of overheating is corrected.

c. Cargo securement: Per 49 CFR 392.9, drivers are instructed to inspect load securement devices within the first 50 miles after beginning a trip, and make necessary adjustments as required. Thereafter, the cargo securement devices will be reexamined when the driver makes a change in duty status, drives for more than 3 hours, or drives for more than 150 miles, whichever comes first. Note that the requirement to examine securement devices is not applicable to the driver of a closed and sealed van-type motor vehicle. If load-shift involving a closed and sealed van-type motor vehicle is suspected, drivers are instructed to notify the shipper, report circumstances and request permission to break the seal and inspect the condition of cargo securement system. For classified shipments, if the stability of the load is in doubt the instructions in paragraph 5-5.2.1 shall be followed. After inspection, the motor vehicle will be re-sealed (drivers shall have been furnished with extra seals for this purpose). Seal application instructions are provided in paragraphs 4-8 and 5-5 of this manual. Drivers are permitted to make adjustments to securement systems as required. However, in the event of substantial misalignment of the AA&E cargo and/or damaged cargo, drivers must notify their carrier dispatchers and the shipper for instructions. Delays must be reported in accordance with paragraph 5-10 of this manual.

5-7. PROCEDURES FOLLOWING AN ACCIDENT.

The potentially disastrous consequences of an accident involving vehicles loaded with A&E dictate that emergency safety procedures be followed in every case. The explosives driver has primary responsibility for taking appropriate steps immediately. NAVSEAINST 8020.18 (series) provides DON policy and procedures concerning emergency response to accidents involving DOD munitions and explosives.

5-7.1. REQUIRED ACTION. When a motor vehicle loaded with A&E becomes involved in an accident, the driver shall:

a. Stop the vehicle immediately.

b. Turn off the ignition.

c. Set the brake and chock the vehicle to prevent movement.

d. Post warning devices on the highway. Ensure that all turn signals are flashing simultaneously while warning devices are being posted.

e. If fire results, the driver shall follow the firefighting instructions found on the shipping papers (refer to paragraphs 9-5 through 9-6.2).

f. Notify local law enforcement authorities.

g. Render first aid. Do not move badly injured persons unless it is absolutely necessary.

h. Notify both shipping and receiving activities by the fastest available means.

i. Notify the Army Operations Center (AOC) at 703-697-0218/0219 collect, or DSN 227-0218/0219 should DOD/EOD assistance be required for clean-up operations.

NOTE

EOD personnel or other competent DOD official(s) must be dispatched to the scene of an accident involving damaged A&E materials. See subparagraph (k) below for further instructions.

j. Provide emergency response information (bill of lading and/or DD Form 836) to law enforcement authorities and firefighting personnel. This data will provide the type of cargo, dangerous characteristics, firefighting techniques, operating distances for firefighters and equipment, and personnel evacuation distances.

k. Do not attempt to handle damaged A&E cargo or unload a disabled vehicle. Assist emergency first responders as necessary. Handling of damaged A&E cargo will begin after the damaged cargo has been declared safe to move and transport by EOD personnel or other competent on-scene DOD officials.

l. Do not sign any insurance or release documents.

m. Express no opinions as to who is to blame for the accident.

n. If an unattended vehicle is struck, make a reasonable effort to locate the missing driver, while maintaining constant surveillance over the vehicle and its AA&E cargo. If this is not possible, leave the following information for the owner of the unattended vehicle:

(1) Name.

(2) Address or home station.

(3) State or Federal Government license numbers.

(4) Destination.

(5) Any other information pertinent to the accident.

o. Stand-by to assist emergency first responders and/or DOD personnel in clean-up operations as required.

NOTE

Motor vehicle disentanglement operations shall not begin until the A&E has been offloaded from the cargo carrying vehicle and moved a safe distance away from the immediate vicinity of the accident.

5-7.2. REQUIRED REPORT. Every accident involving a Navy vehicle shall be reported by the driver of the vehicle on the Motor Vehicle Accident Report, SF 91. Refer to paragraph 3-5.1 and figure 3-18. Detailed instructions for completion of this form are provided in appendix C.

5-8. PROCEDURES FOLLOWING A BREAKDOWN.

When a vehicle loaded with AA&E is disabled due to mechanical failure or reasons other than an accident, the driver is required to take action to ensure the safety of the public and to protect the cargo. If fire results, the driver shall follow the firefighting instructions found on the shipping papers (see paragraph 9-5 through 9-6.2).

WARNING

Do not attempt to jump start a motor vehicle that has A&E cargo onboard.

5-8.1. REQUIRED ACTION. The procedure listed below shall be followed in cases of breakdown:

a. If safe and practicable to do so, drive the vehicle to a safe parking place as far off the highway as possible and away from congested areas.

b. Immediately turn on the vehicle's two front and two rear hazard warning signals; post the emergency warning devices.

c. Notify state/local (as applicable) law enforcement authorities; request on-scene traffic control and security assistance as required -- dispatch of two law enforcement personnel for safety and protection of cargo is preferred.

d. Contact responsible personnel at your home station (point of origin) to report the breakdown and request guidance/assistance as necessary; contact destination activity to report delay in-transit due to breakdown.

e. With concurrence of home station responsible personnel, contact a local vehicle repair shop and arrange for on-site repair work.

WARNING

No hot work shall be performed on a vehicle with A&E cargo present in the vehicle.

f. If on-site repair work is not feasible, with concurrence of responsible home station personnel, arrange to have the A&E loaded vehicle towed to a capable repair facility; choose a repair facility that is located away from congested residential and/or industrial areas. Towing operations will begin once it has been determined by competent personnel that the A&E loaded vehicle is safe to tow.

WARNING

Do not repair the vehicle in an enclosed garage or work area.

g. If on-site or work shop repair work (with or without tow) is not feasible, then, with concurrence and assistance received from responsible home station personnel, arrange to have an

alternate motor vehicle, along with qualified DOD A&E handling personnel and equipment dispatched to the scene of the breakdown. Commence on-site A&E load transfer operations as necessary. See paragraph 5-11 for instructions pertaining to repackaging and transferring A&E cargo in-transit.

5-8.2. REQUIRED REPORT. A complete report shall be made to the safety officer or duty officer at the driver's home activity. The report shall include all pertinent details, including a description of the cause of the breakdown, location, terrain, interval of delay, steps taken to effect repairs, and either a certified statement of costs (if the driver was able to have repairs made), or a receipt if the driver paid for repairs. The report shall be presented to the driver's supervisor, who shall forward it to the safety officer. See paragraph 3-5.2.

5-9. PROCEDURES IN BURNING-AREA OPERATIONS.

Explosives drivers, engaged in burning-area operations, shall follow the orders and instructions given by the supervisor or ordnance worker in charge of the area.

5-9.1. ENTERING THE AREA. When a vehicle delivers authorized materials for the burning area, the ordnance supervisor shall direct the driver to the location for unloading operations or to a holding area behind a barricade.

5-9.2. UNLOADING THE VEHICLE. The driver shall remain in the cab during unloading operations and shall not be required to assist in the unloading. After unloading, the ordnance supervisor or ordnance worker shall direct the driver to drive behind the burning-lane barricade, or another designated area, park the vehicle and turn off the engine.

5-9.3. ACTION DURING ELECTRICAL STORMS. The driver shall park the vehicle so that it will not endanger personnel shelters or centers. The driver shall evacuate the vehicle only on orders from the ordnance supervisor or ordnance worker.

5-9.4. LEAVING THE AREA. All vehicle floors shall be swept thoroughly at the burning area. The vehicle shall be inspected by the ordnance worker before it is permitted to leave.

5-10. PROCEDURES IN CASE OF DELAY FOR MORE THAN 5 HOURS.

If for any reason a motor vehicle carrying AA&E is delayed for more than 5 hours, the driver shall report the delay to the transportation manager or duty officer of the home activity immediately. Delays resulting from delivery being restricted to normal working hours shall not be reported.

5-10.1. REQUIRED ACTION. The explosives driver shall take immediate appropriate action and report the reason for the delay. If the vehicle has been involved in an accident, incident or breakdown, the driver shall observe the procedures outlined in paragraphs 5-7 and 5-8, respectively; and, shall report the situation to the home activity. If the delay is caused by road or weather conditions, the driver shall observe appropriate safety precautions and determine the most practical course of action. Public safety shall always be the first consideration.

5-10.2. REQUIRED REPORT. The report of delay shall provide the following information:

a. Exact location of the vehicle.

b. Cause of the delay.

c. A statement that local law enforcement authorities have been notified.

d. A statement attesting to the level of security that was adhered to throughout the period of delay. For example, in addition to the driver(s) ability/inability to carry out mandatory constant surveillance duties and responsibilities, indicate the extent to which state and/or local law enforcement officials contributed to the surveillance mission.

5-11. REPACKAGING OR TRANSFER OF LOAD IN TRANSIT.

When practicable, and subject to the imposition of reasonable risk control measures, a package of A&E that has been damaged in transit may be replaced or repaired and its contents transferred to the new or required package. The repackaging work must be performed by qualified DOD personnel in accordance with standard A&E packaging procedures. On-scene EOD or other competent DOD personnel must certify that the affected A&E materials are safe to move/handle prior to beginning the repackaging work.

a. Repackaging in Transit.

(1) In-transit repackaging of A&E cargo that has been certified safe to move/handle shall be performed in accordance with approved methods using serviceable packaging supply materials. Questions regarding A&E packaging can be directed to the Naval PHST Center at (732) 866-2851/2821.

(2) The repackaging work must be performed at a safe location in proximity to the cargo transfer site consistent with relevant emergency response operations that may be in process. Care shall be taken to mitigate operational hazards including minimizing public/personnel exposure to risk (keep unauthorized personnel away). To the extent practicable, perform repackaging work at a safe distance from other known concurrent hazardous operations/environmental conditions that may exist in the immediate area. Emergency responders shall also be cognizant of the need to control risk associated with the exposure of susceptible A&E materials to electromagnetic radiation hazards.

WARNING

Drivers shall not dispose of damaged packages/containers -- standing rule applies to both empty packages/containers and those that contain residual A&E items.

(3) When repair of a damaged package is not feasible, the damaged package and its contents shall be diverted only the minimum distance necessary to the nearest compatible civil or DOD safe haven facility pending final disposition instructions. A safe to handle/move/transport certification by EOD or other competent DOD personnel must be obtained prior to execution of this contingency action.

b. Transferring in Transit. Class/Division 1.1, 1.2 and 1.3 A&E and/or Poisons 6.1, shall not be transferred from one container to another or from one vehicle to another on any public highway, street or

road, except in cases of emergency and as directed by a qualified DOD official. In the event of an emergency, the driver shall take action to warn emergency responders and other highway users of ensuing dangers. The driver's responsibility in this regard becomes even more critical when the prospect of transferring A&E cargo from one conveyance to another is apparent. The following actions shall be taken:

(1) Drive the vehicle to a safe parking place as far off the highway as possible and away from congested areas.

WARNING

If the vehicle is diesel-powered, set the transmission in neutral.

(2) Turn off the engine and set the handbrakes.

(3) Immediately turn on the vehicle's two front and rear hazard warning signals, and post the emergency warning devices.

(4) Provide constant surveillance over the vehicle and its cargo while awaiting the arrival of a qualified DOD emergency response A&E cargo handling supervisor and crew members.

c. Reports. For all occasions involving the repackaging and/or transfer of AA&E material in-transit, the driver shall complete a report of corrective action taken. As a minimum, the repackaging and/or transfer report shall include the following information:

(1) Condition of the material before and after repackaging.

(2) Number of containers/packages damaged.

(3) Statement of corrective action taken.

The report will be forwarded to the activity AA&E Safety Officer; a copy of the report will be forwarded to NOSSA (N5).

5-12. PROCEDURES FOR REFUELING A LOADED MOTOR VEHICLE.

A motor vehicle designated for transporting A&E on and off station shall be fueled prior to the commencement of A&E loading operations. An adequate amount of fuel shall be added to the fuel tank to enable the driver to complete delivery of the A&E cargo without having to refuel in-transit. If, while en route to destination, contingency factors beyond the driver's control should arise that require refueling, the following safety precautions shall be followed:

WARNING

Compressed Natural Gas (CNG) powered vehicles shall not be refueled within 100 feet of A&E.

a. The engine shall be turned off.

b. The lights shall be turned off.

WARNING

In the event of a fire, if a carbon dioxide (CO^2) fire extinguisher is present for use in extinguishing the fire, do not direct its content at or into an open fuel tank. Even with a grounded fuel hose, static electricity can be generated and may ignite the fuel vapor, causing an explosion. This is due to high velocity streams of CO^2 being injected into the concentrated vapors of hydrocarbon fuels such as jet propulsion (JP), gasoline, diesel, etc.

c. One driver shall stand by with a fire extinguisher.

d. The nozzle of the fuel hose shall be in continuous and firm contact with the intake pipe of the fuel tank or be otherwise grounded (grounding cable is included in safety equipment required on vehicles).

e. Under no circumstances shall the vehicle be fueled simultaneously with other vehicles.

f. In the event of a fuel spill during refueling, motors on the equipment or refueling unit shall not be started until the tank is capped, and the spill is thoroughly washed down with water; or, the equipment is first moved manually at least 50 feet from the spill.

g. No person may smoke or carry a lighted cigarette, pipe or cigar, or any fire, flame or spark-producing device within 25 feet of the fueling operations.

h. A person must be in constant control of the fueling process at the point where the fuel tank is filled.

5-13. PARKING A LOADED MOTOR VEHICLE

In the interest of protecting the public well-being to the maximum extent, special federal and DOD safety regulations have been established for driving and parking motor vehicles loaded with Class/ Division 1.1, 1.2, and 1.3 A&E. Therefore, military and civilian drivers tasked by the Navy Department to operate motor vehicles engaged in transporting these hazardous materials must comply with the following requirements:

5-13.1. GENERAL RESTRICTIONS. Only essential personnel vehicles shall be operated within 100 feet of fuel storage areas and transfer operations (except service stations), where low-lying accumulations of flammable vapors or hazardous ignition-combustible material sources are present. Drivers of vehicles transporting Class/Division 1.1 through 1.3 A&E shall not park near fuel pumps or similar areas, except when refueling. In addition, vehicles shall not be parked over any grassy area or unpaved surfaces which may be oil-soaked.

WARNING

Under no circumstances shall the driver of a vehicle carrying Class 1.1, 1.2 or 1.3 A&E park in a public garage, on a public parking lot, or leave the vehicle unattended.

5-13.2. PARKING IN THE PUBLIC DOMAIN. The following regulations shall be adhered to for parking Class/Division 1.1, 1.2 and 1.3 A&E loaded motor vehicles in the public domain:

a. Congested Areas. The motor vehicle shall not be parked within 300 feet of a bridge, tunnel, dwelling, or place where people work, congregate, or assemble, except for brief periods when the necessities of operation require the vehicle to be parked and make it impracticable to park the vehicle in any other place.

b. Public Streets or Highways. The motor vehicle shall not be parked within 5 feet of the traveled portion of a public street or highway.

c. Private Property. The motor vehicle shall not be parked on private property (including premises of fueling or eating facilities) without the knowledge and consent of the person who is in charge of the property and who is aware of the nature of the hazardous materials the vehicle contains.

NOTE

See paragraphs 5-7 and 5-8 of this manual for instructions related to accidents and breakdowns respectively that may impact the ability to conform to customary parking rules for vehicles loaded with Class/ Division 1.1, 1.2 and 1.3 A&E.

5-13.3. PARKING ON-STATION. Vehicles loaded with Class/Division 1.1, 1.2 and 1.3 A&E shall be parked on-station only in locations identified in approved site plans and associated fire maps. The following additional regulations apply:

a. AA&E loaded vehicles shall not be parked overnight, except when late or weekend arrival does not permit immediate unloading. In this case, AA&E loaded vehicles shall be parked in approved secure holding areas per the provisions of NAVSEA SW020-AG-SAF-010, Chapter 2 and NAVSEA OP 5 Volume 1, Chapter 12.

b. A&E loaded vehicles shall not be parked and left unattended in front of the doors to magazines and/or operating buildings.

c. Approved secure holdings areas, as noted in subparagraph a. above, shall be used to park AA&E loaded motor vehicles. On an exception basis only, when warranted by current operating conditions, AA&E loaded vehicles may be parked temporarily in open areas between magazines in accordance with existing explosives safety quantity-distance (Q-D) criteria and subject to Explosives Safety Office concurrence.

d. A vehicle that is undergoing AA&E load or offload operations may be parked temporarily alongside a magazine, operating building, or other Potential Explosion Site (PES) pending completion of the load/offload work provided that:

(1) The appropriate Q-D criteria are observed.

(2) The combined Net Explosive Weight (NEW) of the explosives contained in the vehicle, the magazine, operating building, etc., shall not exceed the explosive limit specified for the PES.

(3) An AA&E loaded vehicle parked in a restricted area shall have its engine turned off, brakes set, rear chocked, and ignition key left in the vehicle. If security considerations dictate that the ignition keys be removed, they shall be made readily available to personnel assigned to move the vehicle.

NOTE

Restricted areas differ at each individual activity depending upon Q-D considerations, location of magazines, proximity to inhabited buildings, and the hazard class of magazine contents. Refer to OPNAVINST 5530.14 (series) for further clarification on the various levels of restricted areas.

5-14. PROCEDURES FOR WATER TRANSPORTATION.

When a motor vehicle loaded with AA&E requires water transportation en route, the driver and vessel authorities shall share responsibility for the safety of the public and cargo. Drivers of vehicles shall observe the following procedures:

a. Deliver a letter of identification to the master of the vessel or to a designated representative requesting transportation. The letter shall be signed by the CO of the activity at which the shipment originated. Whenever possible, these letters should be mailed prior to the trip.

b. Deliver to the vessel representative the shipping documents containing the full description of the cargo for review. These papers will be returned to the driver.

c. Drive the vehicle to the location indicated by the vessel representative.

d. Shut off the engine and do not restart it until directed by the vessel representative.

e. Turn off all vehicle lights and do not turn them on again until directed by the vessel representative.

WARNING

One person shall remain in the cab of a diesel powered vehicle. The transmission shall be left in neutral and the parking brake applied. There is a possibility that a warm engine could self-start if the vehicle should roll.

f. Set the brakes securely and chock the wheels to prevent movement. Place non-diesel powered vehicles in the lowest forward gear or in reverse.

g. Remain with the vehicle.

h. Make no repairs or adjustments to the vehicle while aboard the vessel.

i. Do not smoke, and warn others to refrain from smoking within 25 feet of the vehicle.

j. Obey all instructions given by authorized vessel personnel during the voyage and during the drive-on and drive-off operation.

This page left intentionally blank

CHAPTER 6

DELIVERY AND INSPECTION OF LOAD AT DESTINATION

6-1. INTRODUCTION.

This chapter addresses the responsibilities of the explosives driver and shipping inspector when a shipment of arms, ammunition, explosives and related hazardous materials (AA&E) arrives at a military installation via a commercial munitions carrier, as defined in NAVSEA SW020-AG-SAF-010. The following information is presented:

a. Incoming inspection.

b. Delivery of the load.

c. Driver responsibility during unloading.

d. Inspection of empty motor vehicles.

e. Empty ordnance container certification.

f. Inspection of commercial motor vehicles granted temporary storage and refuge.

g. Exemption of classified shipment from carrier inspection.

6-2. INCOMING INSPECTION.

Upon receipt at an activity, an external inspection of any motor vehicle containing AA&E shall be made at a designated location prior to routing within the installation. When commercial carriers are employed to move AA&E over public highways from one area to another area of an installation, an external inspection of the vehicle shall be made before it enters the second area. Inspections are to be accomplished per Section III, items 18 through 28 of DD Form 626 (figure 3-4), and as outlined below.

NOTE

Receiving activities shall accept shipments by commercial carriers when all documentation is in order. However, responsibility for the shipment remains with the carrier until formal delivery is made.

6-2.1. SHIPPING PAPERS. The shipping inspector shall verify that the driver has all necessary shipping papers or that papers are attached to the cargo. Shipping papers shall be properly executed and

completed per paragraph 3-4. The driver's personal papers shall be valid and current per paragraphs 3-2.1 through 3-2.2.

6-2.2. MECHANICAL INSPECTION. The shipping inspector shall ensure that all incoming vehicles are inspected before they are accepted for delivery. The vehicle shall be inspected in an area as close to the gate as possible, but away from hazardous and populated areas. Any deficiencies noted on DD Form 626 must be corrected before the vehicle will be permitted to enter a sensitive area. If deficiencies cannot be corrected and the vehicle does not comply with the requirements of DD Form 626, the vehicle must be unloaded at a location designated by the station commander and the cargo delivered to its destination by station vehicles. A station photographer should be requested and photographs taken of any damaged or unsatisfactory conveyances.

6-2.2.1. Temperature-controlled shipments. Vehicles having temperature control devices shall also be inspected with the criteria set forth in paragraph 4-3.2.1.

6-2.3. PLACARDS. Vehicle placarding shall be per paragraph 4-7. Discrepancies in placarding shall be reported by the shipping inspector on DD Form 361, Transportation Discrepancy Report (refer to paragraph 3-6.1).

6-2.4. SEALS. Motor vehicles containing AA&E or classified material shall be inspected for the presence of door seals or wire security devices, as described in paragraph 4-8. Seal notices and seal tags are required only for exclusive use shipments, per paragraph 3-4.5. Each seal must be physically inspected to ensure that it has not been tampered with, replaced, or broken. Seal numbers shall agree with those shown on the BL. If seals have been broken, lost, or replaced en route, the carrier is required to furnish a satisfactory explanation with proper documentation of the circumstances requiring action. The shipping inspector shall report to the Transportation Officer (TO) any broken, altered, or missing seals noted in the inspection. Motor vehicles with broken seals and/or wire security devices shall be inspected with caution, as tampering, sabotage or theft could have occurred.

6-2.5. TAMPERING, SABOTAGE, OR THEFT. Upon entering a naval installation, all motor vehicles containing AA&E shall be inspected for evidence of tampering, sabotage or theft. This inspection shall include the following:

a. Examination of the topside, outside, underside and inside of each motor vehicle for unusual or foreign objects that may have been attached to or hidden within the motor vehicle.

b. Broken or missing seals or wire security devices.

c. Attempts to pry open doors.

d. Attempts to sabotage any part of the vehicle.

When motor vehicles are suspect, the vehicle shall be removed to an isolated, approved location pending complete inspection of both the vehicle and the load.

6-2.6. MOTOR VEHICLE UNLOADING. Prior to unloading, the shipping inspector shall inspect the blocking and bracing of the load for the following conditions:

a. Blocking, bracing and tiedowns that show apparent damage or movement of material. If required, refer to the MIL-STD (WR) or approved NAVSEA drawing for the shipment.

b. The load has not shifted or been damaged; and, the dunnage structures are in place and intact.

c. Containers, packages, or unit loads are free from visible external damage.

6-2.6.1. Inspection of Cargo. Noncompatible materials shall not have been shipped together (see table 4-1). If both hazardous and non-hazardous materials are contained in the cargo, the shipping papers shall be properly annotated and the hazardous cargo should be in a position to be offloaded first. If the hazardous cargo is loaded forward of inert materials, a placard should be visible inside the van door that states "Hazardous Material Forward" (see paragraph 4-5.10). All containers shall be properly marked and labeled. The cargo space shall not show any signs of previous contamination.

6-2.6.2. Discrepancies. Discrepancies in shipment such as sabotage, theft, damage to AA&E, damage to dunnage structures, improper loading, labeling, or improper blocking and bracing, etc. shall be reported by the shipping inspector using DD Form 361 per paragraph 3-6.1. Discrepancies in packaging, marking or preservation shall be reported using SF 364, (figure 3-21). A station photographer shall be requested and photographs taken of the discrepancies. These photographs shall be submitted with the discrepancy reports. The shipping inspector should coordinate the DD Form 361 and SF 364 discrepancies with the activity TO. After the inspection criteria of DD Form 626 and appendix A have been satisfied, the shipping inspector may release the motor vehicle for unloading.

6-2.7. INSPECTION OF LESS-THAN-TRUCKLOAD (LTL) SHIPMENTS. LTL shipments of ammunition, explosives and related hazardous materials (A&E) shall be inspected for compatibility with other material on the vehicle. Inspection guidelines for LTL shipments are set forth in this manual, DTR 4500.9-R, and 49 CFR which may be obtained from the TO. Refer to MIL-STD-1320 series for specific items on LTL shipments as required.

6-3. DELIVERING THE LOAD.

A shipment of AA&E and applicable shipping documents shall be delivered only to authorized personnel. The driver shall obtain a receipt, i.e. a signed copy of the shipping document or other similar document for the material being delivered. Upon return to the home activity, the receipt shall be given to the proper authority.

6-3.1. SHIPPING OR RECEIVING SHEDS AND TRANSFER DEPOTS. The combined Net Explosive Weight (NEW) of A&E in trucks at a transfer depot or shipping and receiving shed at one time, shall not be greater than that specified by the site approval.

6-3.2. TIME LIMITS. Vehicles loaded with AA&E shall not be held longer than is necessary to unload the cargo. Vehicles shall not be used for temporary storage. Refer to NAVSEA SW020-AG-SAF-010. If the driver arrives at the destination after working hours and is unable to have the vehicle unloaded

immediately, the local authorities shall direct the driver to an authorized parking area as required by local regulations. If the shipment cannot be unloaded within 48 hours after arrival at destination, the driver shall immediately contact the home activity for instructions.

6-3.3. DOCKS, PIERS AND WHARVES. Explosives drivers of vehicles to be unloaded on docks, piers or wharves shall observe the following instructions:

a. Vehicles loaded with explosives shall not be moved onto the dock, pier or wharf until immediately before work is started for the day.

b. Park the vehicle facing an exit with the ignition keys in place.

c. Turn off the engine and remain with the vehicle.

d. Obey smoking regulations and warn others of the dangers of the cargo.

e. Proceed to the unloading location when directed and carry out all orders of the person in charge of unloading operations.

f. Remove the vehicle from the dock, pier or wharf immediately following completion of unloading operations.

6-4. DRIVER'S RESPONSIBILITY DURING UNLOADING.

The driver shall ensure that:

a. The vehicle is correctly positioned in the unloading area.

b. The engine is shut off; never unload with the engine running.

WARNING

One person shall remain in the cab of a diesel powered vehicle. The transmission shall be left in neutral and the parking brake applied. There is a possibility that a warm engine could self-start if the vehicle should roll.

c. The motor vehicle is put in the parking gear, and the parking brake is securely set.

d. The driver shall ensure that the wheels of the vehicle are properly chocked to prevent movement. A stand-alone trailer must always be chocked and have the mechanical brakes set. Approved chocks may be procured through commercial sources provided they meet the requirements of the Society of Automotive Engineers (SAE J 348), or they may be locally fabricated per NAVSEA Drawing 2642779. Refer to paragraph 4-5.5.1 for guidance on when wheel chocks may be omitted.

e. Extreme caution is taken to keep any persons in the vicinity from smoking, lighting matches carrying any flame or lighted cigar, pipe or cigarette. These actions are prohibited.

f. Only nonferrous (non-sparking) metal tools are used.

g. The interior of the cargo space is free from any inwardly projecting parts such as protruding bolts, screws, or nails.

h. The floor of the motor vehicle is tight, and is lined with either nonmetallic material or nonferrous metals when required in accordance with the criteria set forth in paragraph 4-3.1(f).

i. Drivers of trucks will not back up before first checking for clearance and giving warning. If rear visibility is blocked by cargo, or is otherwise limited, guides will be used if available. Guides must be in view of the driver at all times. If guides are not available, the driver will dismount and check clearance before backing.

6-5. INSPECTION OF EMPTY MOTOR VEHICLES.

Before releasing an empty motor vehicle to a carrier, the shipping inspector shall inspect the following:

6-5.1. CARGO SPACE. The cargo space of the motor vehicle shall be free of all explosives and flammables. Dunnage, strapping and debris shall be removed and the cargo space swept clean. If the cargo caused any contamination to the motor vehicle floor or walls, the shipping inspector shall notify the supervisor for corrective action.

6-5.2. PLACARDS. Vehicle placards shall be removed or covered when the motor vehicle no longer contains the article for which the placard is required. This requirement does not apply to a tank motor vehicle that is exclusively used to transport the article for which it is placarded.

6-5.3. SEALS OR SEAL NOTICES. The shipping inspector shall verify that all door seals, seal notices, and seal tags have been removed from the carrier's equipment before it is released to the carrier. See paragraphs 4-8.1 and 6-2.4 for further guidance.

6-5.4. CONTAMINATION. A motor vehicle that has been used to transport material marked as or known to be Poison 6.1 must be inspected for possible contamination before release. The inspector shall ensure the motor vehicle is free of explosives, flammables, dunnage, strapping and any other debris, and that the cargo space has been swept clean. A motor vehicle that has been contaminated shall not be returned to service until the contamination has been removed. Spilled material and contaminated dunnage, flooring, etc., must be managed and disposed of per federal, state and local requirements for solid and hazardous waste. The shipping inspector shall notify the TO for corrective action.

6-5.5. RELEASE OF EMPTY MOTOR VEHICLE. After the requirements specified in paragraphs 6-5.1 through 6-5.4 have been met, the shipping inspector may release the empty motor vehicle to the carrier.

6-6. EMPTY CONTAINER CERTIFICATION.

Empty ordnance containers require inspection and must meet the requirements of NAVSUP P-805 and P-807. Upon receipt, all empty containers, regardless of their origin, must be inspected for markings

and seals certifying their empty condition. Containers which do not meet these requirements must be opened, inspected, and marked and sealed to certify their empty condition. During storage and at the time of shipment or issue, an inspection must be performed per NAVSEA OP 5 Volume 1 to assure that the empty container certification remains valid. An Explosive Event Report (EER) shall be used per OPNAVINST 5102.1 (series) to report a container received as EMPTY by an activity, but found to contain live A&E during inspection. The container shall be treated as recovered material in accordance with NAVSUP P-724, paragraph 4-4.2f.

NOTE

Containers that remain in a facility, or its immediate external storage area, that are inventory-controlled by the facility and are intended for re-use do not require empty identification; however, these empty containers shall be placed in a separate area so as not to be confused with loaded containers. All empty containers shipped from the facility shall be identified and certified empty in accordance with this paragraph.

6-6.1. MARKING AND SEALING EMPTY CONTAINERS. Empty hazardous materials containers must be marked as empty, sealed with traceable seals, and have a properly certified material condition tag or label attached, annotating EMPTY. To comply with MIL-STD-129 (series), all contents markings indicating the presence of hazardous materials such as loading dates, lot numbers, serial numbers, maintenance due dates (MDD), and Department of Transportation (DOT) markings/labels, etc. must be removed/obliterated.

NOTE

Serviceable, emptied containers are intended for re-use. To prevent increased maintenance costs, stenciling shall be accomplished neatly and in a reasonable size. Avoid stenciling or marking over permanent markings. Also, take care to ensure permanent markings are not removed/obliterated.

Empty markings must be applied by any one of the following methods:

a. Stencil EMPTY in approximately 1-inch high letters on both ends and both sides of the container.

b. Apply an EMPTY label on both ends and both sides of the container. Adhesive-backed EMPTY labels may be locally procured or manufactured. The label shall have 1-inch high black lettering on a white vinyl background and measure 6 x 6 inches (152 x 152 cm).

c. Annotate EMPTY on the container as required in the container-specific section of NAVSUP P-805 and P-807.

d. For localized control in addition to the markings required in sub-paragraphs a, b, and c above, fluorescent red tape may be used to indicate an empty weapon container. A durable, colorfast material such as Scotchguard Herculite is suited for such application. This method involves positioning a ribbon

across the center of an open container with approximately twelve inches extending past each side when the lid is replaced. See figure 6-1 for an example of how the red ribbon may be used. Any container which is not marked EMPTY as described above, or which does not display a red ribbon, would be treated as containing a weapon. Use of red ribbons is intended for localized control only and shall be in conjunction with one of the marking methods described in a, b, and c above prior to shipment.

e. Marine Corps activities issuing excess empty containers to Defense Reutilization Marketing Office (DRMO) for disposal must comply with the certification and preparation requirements of MCO 8020.10 (series).

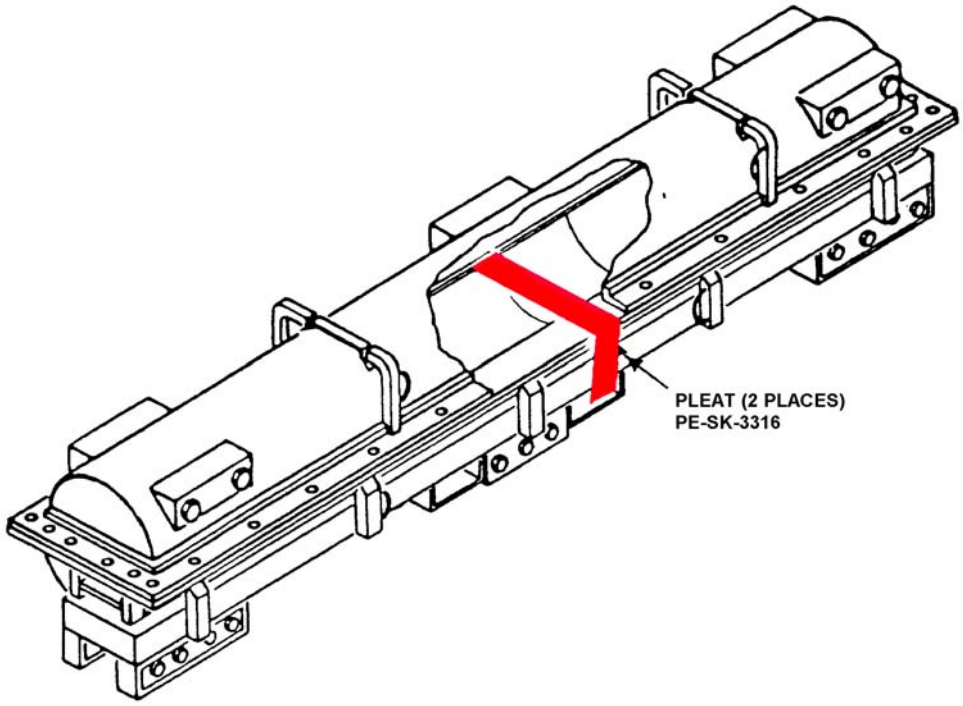

FIGURE 6-1. Use of Red Ribbon to Indicate an Empty Container

6-7. INSPECTION OF COMMERCIAL MOTOR VEHICLES GRANTED TEMPORARY STORAGE AND REFUGE.

When approval is granted by the commanding officer/officer in charge to temporarily stow a motor vehicle containing AA&E during working hours, a complete inspection shall be made to prevent entry of unauthorized shipments or possible sabotage to the activity. Vehicles granted temporary storage and refuge after normal working hours or on holidays must be inspected on the first working day following their arrival. Shipping documents shall be thoroughly examined.

6-8. EXEMPTION OF CLASSIFIED SHIPMENTS FROM CARRIER INSPECTION.

DOT Special Permit 868 (DOT-SP-868) exempts the military departments from carrier inspection of certain Class/Division 1.1 through 1.3 shipments subject to specific security considerations. The latest copy of DOT-SP-868 can be accessed through NAVSEA SW020-AG-SAF-010. Further, this exemption eliminates carrier or BOE inspection of the method of manufacture, packing and storage, or lading and staying. DOT-SP-868 also establishes procedures to be followed if security seals must be broken. Included in the special permit is a statement of the responsibility assumed by the military department when it makes a shipment under this special permit. When a shipment is being made under DOT-SP-868, the shipping activity shall apply seal tags as instructed in paragraph 3-4.5.

CHAPTER 7

RAILCAR INSPECTION

Deleted during Rev. 6.
Moved to NAVSEA SW023-AK-SAF-010

This page left intentionally blank

CHAPTER 8

MILVAN CONTAINER INSPECTION

SECTION I - SHIPPING ACTIVITY MILVAN INSPECTION

8-1. INTRODUCTION.

This chapter contains the general requirements for the inspection of MILVAN containers to be used for transporting arms, ammunition, explosives and related hazardous materials (AA&E). Refer to MIL-STD-1386 (Navy) for detailed load inspection requirements.

8-2. INSPECTION OF EMPTY INCOMING MILVAN CONTAINER.

8-2.1. PRE-LOADING INSPECTION. Prior to loading, MILVAN containers shall be swept clean, protruding nails removed; and, the shipping inspector shall perform the following:

a. Inspect doors and door weather seals for damage or distortion. Doors shall also be checked for loose, worn, or damaged hinges, latches, levers, bolts, nuts and pins. A document holder shall be present.

b. Inspect the roof, sides, ends and doors for holes, tears, rusted spots and punctures.

c. Ensure that the floor and walls are free from contamination, oil or grease spots, or any other stain or residue which might create a hazard when loaded.

d. Inspect all fastenings (rivets, bolts, welds) to ensure strength is not compromised.

e. Inspect squareness of container and undamaged corner fittings.

f. Inspect the general condition of any mechanical bracing systems. Ensure that all 25 crossmembers are present. Inspect belt rails for firm attachment (welds) to the sidewall and any condition that would prevent proper attachment of crossmembers. Examine crossmembers for distortion and condition of end fittings that would prevent proper engagement in the belt rails. Check structural rail members for deformation or otherwise unserviceable conditions.

g. Inspect painted surfaces for deterioration from damage and exposure.

h. Inspect the floor to ensure that it is tight and free of holes and that the floorboards and threshold plate are not warped or in a damaged condition.

i. Inspect the top, bottom, and all sides of the container for evidence of sabotage and for external damage.

8-2.2. DEFICIENCIES. If the inspection reveals any deficiency noted in paragraph 8-2.1, the MILVAN container shall be rejected. If the discrepancies are minor and can be repaired, the repaired MILVAN container shall then be reinspected to ensure the cause of rejection was eliminated.

8-3. INSPECTION OF LOADED MILVAN CONTAINER.

8-3.1. GENERAL. The MILVAN container shall be loaded per the requirements of MIL-STD-1386 and paragraph 4-5.5.1 of this manual. Inspections of MILVAN's will be conducted per the provisions of MIL-HDBK-138 (current revision), "Guide to Container Inspection for Commercial and Military Intermodal Containers." Load inspection shall be performed as each container is put in place and dunnaged. Ensure that the cargo is properly positioned against the end and side walls and that dunnage fills all empty spaces within one inch both longitudinally and laterally. Inspection shall determine if the cargo is properly packaged, marked, loaded, and secured per the applicable MIL-STD slash sheet or approved NAVSEA drawing. Loaded MILVAN containers will also be inspected at each intermediate point per the requirements of this manual.

8-3.2. MIXED LOAD COMPATIBILITY. The shipping inspector shall ensure that the types of ammunition, explosives and related hazardous materials (A&E) loaded in the MILVAN container are compatible as discussed and shown in the compatibility chart in table 4-1.

8-3.3. LOADS CONSISTING OF HAZARDOUS AND NON-HAZARDOUS MATERIALS. If the load consists of hazardous and non-hazardous materials, the shipping inspector should ensure that the hazardous materials are loaded last so that they may be unloaded first. If hazardous materials must be loaded forward of non-hazardous materials for operational necessity, a placard shall be placed on the inside of the MILVAN container which states "Hazardous Material Forward."

8-3.4. BLOCKING AND BRACING. The shipping inspector will ensure that the load is blocked and braced per the requirements of MIL-STD-1386.

8-4. MILVAN INSPECTION PRIOR TO RELEASE.

Prior to release of the MILVAN container to a carrier, the shipping inspector must ensure the following:

a. The cargo is secure and labeled, as required, and there are no signs of spillage or leaking A&E.

b. Shipping documents are attached to dunnage or some other conspicuous place before doors are closed.

c. There are no damaged hinges or latches.

d. The doors close, seal and lock properly.

e. There are no signs of external damage.

f. The specified weight restrictions and load limitations based on intended mode of transportation are not exceeded.

g. If shipment is to be by motor vehicle, the proper instructions are supplied to the driver.

8-5. INSPECTION OF SEALED MILVAN CONTAINER.

8-5.1. GENERAL. When a shipment of AA&E is moved from a shipping activity to a receiving activity without being opened, the container must be sealed. This requirement applies to all classified shipments, shipments of Class/Division 1.1 through 1.4 A&E, and less-than-container shipments when exclusive use of the vehicle is authorized. The shipping inspector shall ensure that the seal and wire security device are per paragraphs 8-5.2 and 8-5.3.

8-5.2. SECURITY SEALS. A U.S. numbered (serialized) security seal shall be attached to the doors and the seal number shall be shown on the BL. Refer to paragraph 4-8 and figure 4-4 for guidance on MILVAN/ISO containers configured with a customs catch plate door design. Seal notices and seal tags are required only on exclusive use shipments, per paragraph 3-4.5.

8-5.3. WIRE SECURITY DEVICE. Shipments of classified sensitive materials shall be secured by a wire security device as described in paragraph 4-8.2 and shown in figure 4-6.

8-6. PLACARDS.

Appropriate placards shall be attached to outside of the MILVAN container for the intended mode of transportation. Refer to paragraph 4-7 for placarding requirements.

8-7. MILVAN SIGNATURE.

After all requirements of paragraphs 8-3 through 8-6 are met, the shipping inspector shall sign the proper inspection form and release the MILVAN container to the carrier.

SECTION II - RECEIVING ACTIVITY MILVAN CONTAINER INSPECTION

8-8. INTRODUCTION.

When loaded MILVAN containers are received for transshipment, the carrying conveyance shall be inspected per the requirements of this manual and MIL-HDBK-138 (current revision), including an inspection for the proper loading of the MILVAN on the transport conveyance. The MILVAN shall then be inspected externally per the requirements of paragraphs 8-9.1 through 8-9.4. If there is any evidence of the container having been opened, the load inspection cited in paragraph 8-9.4 shall be performed. When loaded MILVAN containers arrive at a receiving activity for unloading, the inspections cited in paragraphs 8-9.1 through 8-9.4 shall be performed before start of unloading operations.

8-9. INSPECTION OF LOADED INCOMING MILVAN CONTAINER.

8-9.1. WEIGHT AND CONDITION. Loaded MILVAN containers shall be weighed to ensure accurate weight for ship stowage. An incoming motor vehicle with one loaded MILVAN container and the same empty outgoing motor vehicle shall be weighed. The difference will be the weight of the MILVAN container, including contents, which must be annotated on the cargo manifest, DD Form 1385-1. If two MILVANs are on a motor vehicle, then each must be weighed separately.

8-9.2. PLACARDS. The shipping inspector will ensure that appropriate placards are attached to the MILVAN container. Refer to paragraph 4-7 for placarding requirements.

8-9.3. TAMPERING, SABOTAGE OR THEFT. Inspect the doors to ensure all required seals and securing devices are present and intact. If seals and securing devices are missing or have been tampered with, contact the Security Office and request photographs be taken.

8-9.4. LOAD INSPECTION. Load inspection will not be performed for MILVAN containers in transshipment unless evidence of tampering, sabotage or theft is found. Inspection of a loaded MILVAN container will be performed per the requirements of MIL-STD-1386.

8-10. INSPECTION OF EMPTY CONTAINERS.

Empty MILVAN containers may be released to the supplier after the inspection criteria of paragraph 8-2 through 8-2.2 has been satisfied. Removal of seals, seal notices, placards, decontamination (if needed), and securing of the doors are required before release.

CHAPTER 9

FIRE REGULATIONS

9-1. INTRODUCTION.

The danger of fire is inherent in every motor vehicle loaded with ammunition, explosives and related hazardous materials (A&E). This chapter provides instructions for explosives drivers regarding preparation for potential fire, preventive measures, passing fires along the highway, firefighting equipment, and firefighting procedures. Explosives drivers are required to read and understand the following information.

9-2. PREPARATION.

Explosives drivers shall be provided with emergency response/firefighting information (i.e. safe operating distances for firefighters, safe evacuation distances, etc.) appropriate to the specific loads they are transporting. This information will be found with the bill of lading, or on the DD Form 836 (figure 3-14) for military or government drivers transporting A&E within CONUS. The North American Emergency Response Guidebook (ERG) guidesheet applicable to the A&E being transported must be attached to the DD Form 836. Explosives drivers shall read, sign and carry these instructions with them at all times from point of origin to destination. Additionally, drivers shall know the content of the load, be aware of the hazards, and have knowledge of the following:

a. Type of cargo, number of packages, total weight.

b. Hazard Class and Division, Compatibility Group, UN Number, Proper Shipping Name, and Net Explosive Weight (NEW).

c. Required placards.

d. Safe driving regulations, i.e. safe following distances, restriction against use of flame-producing devices and smoking, proper refueling practices, parking regulations, etc.

e. Warning instructions.

f. Emergency response telephone numbers.

9-3. FIRE PREVENTION.

Explosives drivers shall exert every effort to prevent fires in vehicles transporting A&E. Therefore, drivers shall adhere to all rules and regulations concerning the following:

a. Use of plastic bedliners. (See "WARNING" after paragraph 4-2.)

b. Convoy distances. (See paragraph 5-2.9.3.)

c. Flame-producing devices. (See paragraph 5-4.1.)

d. Refueling (see paragraph 5-12).

e. Safe driving. (See paragraphs 5-2.6 and 9-4.)

f. Smoking. (See paragraph 5-4.2.)

g. Vehicle inspection. (See paragraph 4-4.)

h. Parking. (See paragraphs 5-13 and 9-4.)

9-4. PASSING FIRES ALONG THE HIGHWAY.

Motor vehicles transporting arms, ammunition, explosives and related hazardous materials (AA&E) shall not be driven past fires of any kind burning on or near the highway until the driver has determined that the passing can be made safely and without stopping (300 feet or more). A motor vehicle containing AA&E must not be parked within 300 feet of an open fire.

9-5. FIREFIGHTING EQUIPMENT.

9-5.1. SPECIFICATION FOR FIRE EXTINGUISHERS. Each motor vehicle used for transporting AA&E on and off station shall be equipped with a single portable fire extinguisher. The portable fire extinguisher will be dry chemical type with a minimum Underwriters' Laboratory (UL) capacity rating of 10-B:C or a multi-purpose dry chemical fire extinguisher with a UL rating of 2 to 5-A/10-B:C. Motor vehicle maintenance personnel should consult with fire department officials and supply personnel to select the type of fire extinguisher best suited to meet local requirements in accordance with the specifications listed above.

The portable fire extinguisher shall be properly filled, securely bracket mounted, readily accessible, and easily removable for use. Drivers shall be instructed as to the care, inspection and use of installed portable dry chemical fire extinguishers. NFPA 10 provides instructions on the care and use of portable fire extinguishers; NFPA 17 provides instructions on dry chemical extinguishing systems. Maintenance and inspection of portable fire extinguishers shall be coordinated through individual activity fire departments.

NOTE

The guidelines outlined above follow those presented in 49 CFR 393.95, which require one fire extinguisher per vehicle transporting AA&E. It is the policy of the Department of the Navy (DON) to follow these guidelines for all DON shipments of AA&E.

9-5.1.1. Activities may continue to use carbon dioxide (CO2) filled fire extinguishers until local supplies are exhausted. Halon has been found to be an ozone depleting substance, therefore, Halon 1211 portable fire extinguishers shall not be installed on motor vehicles used for transporting ammunition and explosives.

9-6. FIREFIGHTING PROCEDURES.

Should a fire occur on a vehicle carrying AA&E, the driver shall park the vehicle as far from the highway and as far removed from a congested area as possible. Figures 9-1 and 9-2 provide a summary of DD Form 836 emergency response information for Class/Division 1.1 through 1.6 A&E. The following firefighting procedures shall be strictly followed.

9-6.1. VEHICLE FIRES. If any part of the vehicle (other than the actual cargo) catches fire, the driver shall use the hand extinguisher immediately and attempt to extinguish the fire. The driver shall make every effort to prevent the fire from reaching the cargo.

WARNING

Do not attempt to fight any fire that has reached the cargo area.

9-6.2. CARGO FIRES. If the cargo does catch fire (or if fire in any part of the vehicle cannot be controlled with the equipment on hand); the driver shall not attempt to fight the fire. The driver shall withdraw from the area, and take the following action per the emergency response procedures outlined on the shipping papers.

a. Call the emergency response telephone number on the shipping papers first. Notify police and fire departments. Upon their arrival, furnish the specific emergency response instructions provided on the shipping papers, or on the DD Form 836.

b. Warn the public and evacuate any persons from the area per the approach distances specified on the shipping papers.

POTENTIAL HAZARDS

FIRE OR EXPLOSION:
--MAY EXPLODE AND THROW FRAGMENTS 1600 METERS (1 MILE) OR MORE IF FIRE REACHES CARGO.

HEALTH HAZARDS:
--Fire may produce irritating, corrosive and/or toxic gases.

EMERGENCY ACTION/PUBLIC SAFETY

--CALL EMERGENCY RESPONSE TELEPHONE NUMBER ON SHIPPING PAPER FIRST. IF SHIPPING PAPER IS NOT AVAILABLE OR THERE IS NO ANSWER; CALL CHEMTREC AT 1-800-424-9300.
--Consider initial evacuation of 1/2 mile in all directions for a large spill.
--Isolate spill or leak area immediately for at least 1/3 mile in all directions. Move people out of line of sight of the scene and away from windows.
--Keep unauthorized personnel away and stay upwind.
--Ventilate closed spaces before entering.
--Wear positive pressure self-contained breathing apparatus (SCBA). Structural firefighters' protective clothing will only provide limited protection.

--CARGO FIRES: DO NOT FIGHT FIRE WHEN IT REACHES CARGO. CARGO MAY EXPLODE. Stop all traffic and clear the area for at least 1 mile in all directions and let fire burn. Do not move cargo or vehicle if cargo has been exposed to heat.
--TIRE OR VEHICLE FIRES: Promptly isolate the scene by removing ALL PERSONS from the vicinity of the incident if there is a fire. First, move people out of line-of-sight of the scene and away from windows. Then, obtain more information and specific guidance from competent authorities listed on the shipping papers. Try to prevent fire from reaching the explosive cargo compartment. Flood with water, dry chemical or dirt. If possible, and WITHOUT RISK, use unmanned hose holders or monitor nozzles from maximum distance to prevent fire from spreading to cargo area. Pay special attention to tire fires, as re-ignition may occur. Stand by with extinguisher ready.
--RAILCAR OR TRAILER FIRES: If railcar or trailer is involved in a fire and heavily encased explosives such as bombs or artillery projectiles are suspected, ISOLATE for 5,280 feet (1 mile) in all directions; also, initiate evacuation including emergency responders for 5,280 feet (1 mile) in all directions.
--When heavily encased explosives are not involved, evacuate the area for 2,500 feet (1/2 mile) in all directions.

SPILL OR LEAK:
--Eliminate all ignition sources (no smoking, flares, sparks or flames in immediate area).
--All equipment used when handling the product must be grounded.
--Do not touch or walk through spilled material.
--DO NOT OPERATE RADIO TRANSMITTERS WITHIN 330 FEET (100 METERS) OF ELECTRIC DETONATORS.
--DO NOT CLEAN UP OR DISPOSE OF, EXCEPT UNDER SUPERVISION OF A SPECIALIST.

FIRST AID
--Move victim to fresh air. Call 911 or emergency medical service. Use first aid treatment according to the nature of the injury. Administer oxygen if breathing is difficult.
--Remove and isolate contaminated clothing and shoes.
--In case of contact with substance, immediately flush skin or eyes with running water for at least 20 minutes.
--Ensure that medical personnel are aware of the material(s) involved, and take precautions to protect themselves.

FIGURE 9-1. Summary of Emergency Response Information, Class/Division 1.1, 1.2, 1.3, 1.5 or 1.6 Explosives (Page 1 of 1)

POTENTIAL HAZARDS

FIRE OR EXPLOSION:
--MAY EXPLODE AND THROW FRAGMENTS 500 METERS (1/3 MILE) OR MORE IF FIRE REACHES CARGO.

HEALTH HAZARDS:
--Fire may produce irritating, corrosive and/or toxic gases.

EMERGENCY ACTION/PUBLIC SAFETY

--CALL EMERGENCY RESPONSE TELEPHONE NUMBER ON SHIPPING PAPER FIRST. IF SHIPPING PAPER IS NOT AVAILABLE OR NO ANSWER, CALL CHEMTREC AT 1-800-424-9300.
--Consider initial evacuation of 800 feet in all direction for a large spill.
--Isolate spill or leak area immediately for at least 330 feet in all directions. Move people out of line of sight of the scene and away from windows. Then, obtain more information and specific guidance from competent authorities listed on the shipping papers.
--Keep unauthorized personnel away and stay up wind.
--Ventilate closed spaces before entering.
--Wear positive pressure self-contained breathing apparatus (SCBA). Structural firefighter's protective clothing will only provide limited protection.

--CARGO FIRES: DO NOT FIGHT FIRE WHEN IT REACHES CARGO. CARGO MAY EXPLODE. Clear the area for at least 1/3 mile in all directions and let fire burn. Do not move cargo or vehicle if cargo has been exposed to heat.
--TIRE OR VEHICLE FIRES: Try to prevent fire from reaching the explosive cargo compartment. Flood with water, dry chemical or dirt. If possible, and WITHOUT RISK, use unmanned hose holders or monitor nozzles from maximum distance to prevent fire from spreading to cargo area. Pay special attention to tire fires, as re-ignition may occur. Stand by with extinguisher ready.
--RAILCAR OR TRAILER FIRES: If a railcar or trailer is involved in a fire, ISOLATE for 500 meters (1/3 mile) in all directions; also initiate evacuation including emergency responders for 500 meters (1/3 mile) in all directions.

SPILL OR LEAK:
--Eliminate all ignition sources (no smoking, flares, sparks or flames in immediate area).
--All equipment used when handling the product must be grounded.
--Do not touch or walk through spilled material.
--DO NOT OPERATE RADIO TRANSMITTERS WITHIN 330 FEET (100 METERS) OF ELECTRIC DETONATORS.
--DO NOT CLEAN-UP OR DISPOSE OF, EXCEPT UNDER SUPERVISION OF A SPECIALIST.

FIRST AID
--Move victim to fresh air. Call 911 or emergency medical service. Use first aid treatment according to the nature of the injury. Administer oxygen if breathing is difficult.
--Remove and isolate contaminated clothing and shoes.
--In case of contact with substance, immediately flush skin or eyes with running water for at least 20 minutes.
--Ensure that medical personnel are aware of the material(s) involved, and take precautions to protect themselves.

SUPPLEMENTAL INFORMATION
--Packages bearing the 1.4S label or packages containing material classified as 1.4S are designed or packaged in such a manner that when involved in a fire, may burn vigorously with localized detonations and projections of fragments. Effects are usually confined to immediate vicinity of packages. If fire threatens cargo area containing packages bearing the 1.4S label or packages containing material classified as 1.4S, consider isolating at least 15 meters (50 feet) in all directions. Fight fire with normal precautions from a reasonable distance.

FIGURE 9-2. Summary of Emergency Response Information, Class/Division 1.4 Explosives (Page 1 of 1)

This page left intentionally blank

APPENDIX A

CRITERIA FOR INSPECTION OF MOTOR VEHICLES

DETAILED INSTRUCTIONS FOR COMPLETING DD FORM 626

A-1. INTRODUCTION.

All spaces on DD Form 626 shall be filled in or checked as applicable. The following instructions include the DOT and Motor Carrier Safety Regulations (MCSR) requirements and shall be observed in completing DD Form 626 at origin and destination. These instructions are more detailed than DD Form 626 and are meant to clarify requirements. The item numbers correspond to the numbered items on the DD Form 626. All numbered items shall be checked as satisfactory or unsatisfactory. The unsatisfactory conditions shall be explained in the "Remarks" column. Shipping inspectors must exercise sound judgement in determining satisfactory working conditions of parts for which no specific standard of operation can be established. For example, check the sliding tandem (axle) on motor vehicle trailers for misalignment and position. Look for damaged, worn, or missing parts. Check to ensure the teeth of the locking mechanism mesh with those of the rail secured to the frame. Ensure that the handle is in the locked position and secured.

SECTION I - DOCUMENTATION

1. Bill of Lading/Transportation Control No. Insert Bill of Lading number.

2. Carrier/Government Organization. Give the full name of the trucking company or government organization. Do not use abbreviations or nicknames.

3. Date/Time of Inspection. Provide the date and exact time (a.m./p.m.) of the inspection.

4. Location of Inspection. Provide the exact location of inspection (name of activity/installation and geographic location).

5. Operator(s) Name(s). Enter the name(s) of the driver(s) of the vehicle presented for inspection. (Commercial and off-station drivers must be 21 years of age or older.)

6. Operator(s) License Number(s). The driver must have a valid state driver's license with CDL endorsement for hazardous materials. (This requirement is permanently waived for those personnel stationed outside the 50 states who are otherwise eligible to obtain an explosives driver's permit.) Military drivers are exempt from CDL requirements. Navy and Marine Corps drivers also must have a U. S. Government Motor Vehicle Operator's Identification, Optional Form 346, on which it states "Explosives Driver (must hold a current medical certificate)."

7. Medical Examiner's Certificate. Enter the expiration date from certificate. Ensure expiration date meets the periodicity requirements of paragraph 2-2.2. An explosives driver is not physically qualified to drive a motor vehicle if he/she:

a. Has loss of a foot, leg, hand, arm or an eye.

b. Is not wearing glasses or corrective lenses when so indicated on their Medical Examiner's Certificate.

c. Is not wearing a hearing aid when so indicated on the Medical Examiner's Certificate. The driver should also have a spare power source available for use in the hearing aid.

(1) The Medical Examiner's Certificate shall be similar in appearance to the one shown in figure 3-2.

8a. Military HAZMAT Certification. APPLIES TO MILITARY OPERATORS ONLY. Military Hazardous Materials Certification. Per applicable service regulations, ensure operator has been certified to transport hazardous materials.

8b. Valid Lease. Shipper will ensure a copy of the appropriate contract or lease is carried in all leased vehicles and is available for inspection. The lease must be valid, in writing, signed by the contracting parties and must not permit cancellation by either party on less than 30 days notice. The contract must provide for exclusive possession, control and use of equipment and for the complete assumption of liability by the lessee. If the lease could expire before the carrier will be able to make the delivery, the shipment shall not be tendered to that carrier.

8c. Route Plan. Prior to loading any Class/Division 1.1 through 1.3 ammunition, explosives and related hazardous materials (A&E) for shipment, ensure that the operator possesses a written route plan per 49 CFR 397. Route plan requirements for Hazard Class 7 (radioactive) materials are found in 49 CFR 397.101.

8d. Emergency Response Guidebook (ERG) or Equivalent. Commercial operators must be in possession of an ERG or equivalent document. If a military vehicle is going off-base, military operators shall have the ERG in their possession. An equivalent would be the applicable pages from the ERG., which will be provided by the shipper to military.

8e. Driver's Vehicle Inspection Report. Review the operator's Vehicle Inspection Report. Ensure that there are no defects listed on the report that would affect the safe operation of the vehicle.

8f. Copy of 49 CFR 397. Operators are required by regulation to have in their possession a copy of 49 CFR 397 (Hazardous Materials Driving and Parking Rules). If military operators do not possess this document, shipper may provide a copy to the operator. This document is available in appendix D of this manual.

9. Commercial Vehicle Safety Alliance (CVSA) Decal Displayed on Commercial Equipment. The Commercial Vehicle Safety Alliance (CVSA) Decal is an annual state inspection sticker. Check to see if commercial equipment has a current CVSA decal and mark the applicable box. These decals are not applicable to government-owned or operated vehicles. Navy and Marine Corps installations are still required to perform a detailed inspection using DD Form 626 on commercial vehicles transporting arms, ammunition, explosives and related hazardous materials (AA&E).

SECTION II - MECHANICAL INSPECTION

10. Type of Vehicle(s). Indicate whether conveyance is a truck, dromedary, truck and full trailer, tractor and double trailers, tractor and closed semitrailer, or tractor and flatbed trailer. Truck means any self-propelled motor vehicle, except a truck-tractor. Truck and full trailer denotes a truck and a vehicle, with or without motive power, designated to be drawn by another vehicle. No part of the weight of a full trailer (except the towing device) rests on the towing vehicle. Tractor and closed semi-trailer is a conveyance consisting of a self-propelled motor vehicle (tractor) which draws a van-type vehicle (semitrailer) while supporting a portion of the drawn vehicle's weight and load. Tractor and flatbed trailer is fundamentally the same as tractor and semitrailer except that in this case the trailer is open without sides. Tractor and double trailers is a full trailer attached to a semitrailer powered by a single tractor.

NOTE

Double trailers may be used to transport explosives only if there is complete compliance with Parts 393.70(a) through (c) of the DOT Motor Carrier Safety Regulations and if the conditions noted in NAVSEA SW020-AG-SAF-010 are met.

11. Vehicle Number(s). Indicate truck (tractor) number, e.g. Ris T-704. Enter the number of the ICC permit shown on the side of the tractor (truck).

12. Parts Inspected. The following inspections shall be checked as satisfactory or unsatisfactory. Unsatisfactory conditions shall be explained in the “Remarks” column. Shipping inspectors must exercise sound judgement in estimating satisfactory working conditions of parts for which no specific standard of condition can be established.

Item No.	Inspection Criteria
12a.	Spare Electrical Fuses. Verify that fuses of correct size are installed; and, at least one spare fuse for each kind and type installed is carried in the vehicle. Adequate tools for changing fuses shall be carried. If the vehicle is equipped with a circuit breaker, ensure it is working properly.
12b.	Horn Operative. Horn must be securely mounted, operative, and have adequate volume for its purpose. Horn may be operated electrically or by air. Only one horn per vehicle is required. (49 CFR 393.81)

Item No.	Inspection Criteria

12c. Steering System. The steering wheel shall be secure and must not have any spokes cracked through or missing. The steering column must be securely fastened. Universal joints shall not be worn, faulty or repaired by welding. The steering gear box shall not have loose or missing mounting bolts or cracks in the gear box mounting brackets. The pitman arm on the steering gear output shaft shall not be loose. Steering wheel shall turn freely through the limit of travel in both directions. All components of a power steering system must be in operating condition. No parts shall be loose or broken. Belts shall not be frayed, cracked or slipping. The power steering system shall not be leaking. (49 CFR, Chapter III, Subchapter B, Appendix G)

12d. Windshield/Wipers.

(1) Windshield shall be equipped with at least two automatically operating windshield wiper blades, one on each side of the centerline of the windshield and must be in good condition. Be sure windshield is free of cracks, breaks or defects that will make the operation of the vehicle unsafe.

(2) Every motor vehicle windshield shall be free of discoloration or other damage in that portion thereof extending upward from the height of the top-most portion of the steering wheel, but not including a 2-inch border at the top and a 1-inch border at each side of the windshield or each panel thereof.

(3) No motor vehicle may be operated with any label, sticker, decal or other vision-reducing matter covering the windshield or windows at either side of the driver's compartment. Decals or stickers required by Federal or State law may be located at the bottom or sides of the windshield, per the guidelines presented in 49 CFR 393.60.

(4) Trucks or truck-tractors that will operate under frost, ice, or snow conditions must be equipped with an operative automatic defrosting device. (49 CFR 393.60, 393.78 and 393.79)

12e. Mirrors. Every vehicle must be equipped with two rear vision mirrors located so as to reflect to the driver a view of the highway to the rear along both sides of the vehicle. Mirrors shall not be cracked or dirty. (49 CFR 393.80)

12f. Warning Equipment.

(1) Vehicle must be equipped with three bidirectional emergency reflective triangles that conform with the requirements of Federal Motor Vehicle Safety Standard No. 125. (The signal is marked certifying that it is designed and constructed to comply with these requirements.)

Item No.	Inspection Criteria

(2) Each reflector shall be a collapsible equilateral triangle, with legs not less than 17 inches long and not less than two inches wide. The front and back of the exposed leg surfaces shall be covered with red reflective material not less than one half inch in width. The reflective surface, front and back, shall be approximately parallel. When placed in position, one point of the triangle shall be upward. The area within the sides of the triangle shall be open.

(3) Each reflector shall be composed of at least two reflecting elements or surfaces on each side, front and back. The reflecting elements, front and back shall be approximately parallel.

(4) If the reflecting elements are so designed or constructed that the reflecting surfaces would be adversely affected by dust, soot, or other foreign matter or contact with other parts of the reflector or its container, then such reflecting surfaces shall be adequately sealed within the body of the reflector.

(5) Each set of reflective triangles shall be adequately protected by an enclosure in a box, rack, or other adequate container specially designed and constructed so that the reflectors may be readily extracted for use.

(6) The preceding reflective devices eliminate the need for both flags and reflectors as the new reflective triangles are used for day or night warning.

(7) Signals produced by flame are forbidden and shall not be carried on vehicles used to transport explosives. (49 CFR 393.95)

12g. Fire Extinguisher.

(1) Each motor vehicle used for transporting AA&E on and off station shall be equipped with a single portable fire extinguisher. The portable fire extinguisher will be dry chemical type with a minimum Underwriters' Laboratory (UL) capacity rating of 10-B:C or a multi-purpose dry chemical fire extinguisher with a UL rating of 2 to 5-A/10-B:C. Motor vehicle maintenance personnel should consult with fire department officials and supply personnel to select the type of fire extinguisher best suited to meet local requirements in accordance with the specifications listed above.

(2) The portable fire extinguisher shall be properly filled, securely bracket mounted, readily accessible, and easily removable for use. Drivers shall be instructed as to the care, inspection and use of installed portable dry chemical fire extinguishers. NFPA 10 provides instructions on the care and use of portable fire extinguishers; NFPA 17 provides instructions on dry chemical extinguishing systems. Maintenance and inspection of portable fire extinguishers shall be coordinated through individual activity fire departments.

Item No.	Inspection Criteria

(3) Activities may continue to use carbon dioxide (CO2) filled fire extinguishers until local supplies are exhausted. Halon has been found to be an ozone depleting substance, therefore, Halon 1211 portable fire extinguishers shall not be installed on motor vehicles used for transporting A&E.

NOTE

The guidelines outlined above follow those presented in 49 CFR 393.95, which require one fire extinguisher per vehicle transporting A&E. It is the policy of the Department of the Navy (DON) to follow these guidelines for all DON shipments of A&E.

12h. Electrical Wiring.

(1) Wiring must be cleaned and properly secured, and insulation shall not be frayed, missing, loose, dangling, chafing, or otherwise in poor condition. There shall be no uninsulated wires or improper splices in wiring. Connections shall be in accordance with accepted automotive practices. Wiring shall not be located where it can be charred, overheated, or enmeshed in moving parts. Electrical wiring between towing and towed vehicle shall be contained in cable, or cables, or entirely within another substantially constructed device. Such wiring shall provide sufficient slack between the two vehicles to accommodate all normal motions of the towing and towed vehicle without damage. Wiring must be as far from the fuel system as is practical. Unless the wire is metal covered, all holes through which it passes must be either rolled or bushed with rubber or similar material. Wiring shall not be in contact with cargo, even though protected. See 49 CFR 393.28, 393.32, and 393.33. Electrical connections between vehicles shall not be permanently joined; a 5- or 7-way plug is required. Wiring shall be grouped wherever possible and supported where necessary.

(2) Every storage battery on every vehicle, unless located in the engine compartment, shall be covered by a fixed part of the motor vehicle or protected by a removable cover or enclosure. Removable covers or enclosures shall be substantial and shall be securely latched or fastened. Cell caps must be present and operate properly if battery is not a completely sealed type.

(3) The use of lights within van trailers hauling Naval ordnance is authorized provided the following conditions are met:

(a) Power to the van or dromedary is controlled by a switch within the trailer cab that displays a visual signal when power to the separate lighting circuit is energized.

Item No.	Inspection Criteria
	(b) A separate light switch is included in the van or dromedary. The switch must be recessed into the wall paneling of the van. Connections to the switch must be soldered and insulated to prevent potential shorts. (c) Wiring to the switch and lights must be contained within the van walls and can only be exposed where the wires leave the walls to connect with lights. (d) Discrepancies noted when inspecting the lights within van trailers shall be annotated on DD Form 626 Item No. 12h.
12i.	Lights and Reflectors. (Head, tail, turn signal, brake, clearance, marker and identification lights, emergency flashers). All lights and switches must be operative. No light shall have a broken or missing lens, or be obscured by dirt or grease. Turn-signal system on all motor vehicles other than tactical types must have a switch that will cause all four turn signals to flash simultaneously, whether the ignition switch is on or off, as a traffic hazard warning. Tail light and stop light may be combined in the same housing if requirements for each are met. Side and front clearance lights and rear and side clearance lights may be combined and use the same light source. Emergency flashers must be operative on both the front and rear of vehicle. See 49 CFR 393. All required reflectors must be present, securely attached, not obscured, or damaged to the point of being ineffective. Trailers manufactured on or after 1 December 1993 shall have been retrofitted with the required conspicuity system, to include the use of retroreflective sheeting and reflex reflectors in a red and white pattern (49 CFR 571.108). Retroreflective sheeting and reflex reflectors shall appear on each side of the trailer or semitrailer as prescribed in 49 CFR 393.13.
12j.	Fuel System. Fuel tank and lines must be in good condition, free from leaks, and securely mounted. There shall be no defective gaskets or plugged vents on caps. Ensure that the fuel tank filler cap is not missing. Fuel tanks are not allowed on trailers or semitrailers unless specifically designed for temperature control operations. Such fuel must be of a diesel type. Fuel tanks forward of front axle of power unit are not permitted. Filler necks must be in good condition, securely supported, not leaking at joints, and located so that fuel spilled vertically while tank is being filled will not contact any part of the exhaust or electrical system. No part of any fuel tank or intake pipe shall project beyond overall width of motor vehicle on which it is mounted. No part is forward of the front axle of the power unit. Intake-pipe opening shall be located outside the vehicle's passenger and cargo compartments and shall be fitted with a cap that can be fastened securely. If tractor is equipped with selector control valve for fuel feed from auxiliary tanks: (1) The valve shall be installed so that it is within normal reach of the driver, who must be able to operate the valve without taking eyes from the road or moving from a normal driving position; or,

Item No.	Inspection Criteria

(2) The valve shall be so located that the driver must stop the vehicle and leave the driver's seat in order to operate the valve. Gravity or syphon-feed type fuel systems are prohibited.

(3) Motor vehicles using compressed natural gas (CNG) may be used to transport AA&E both on-station and off-station providing the safety requirements of NAVSEA SW020-AG-SAF-010 are met. Specific inspection criteria peculiar to CNG fuel systems shall have been inserted as an addendum to the DD Form 626, per NAVSEA SW020-AG-SAF-010. Personnel shall start the safety inspection at the CNG fuel tank and then continue the inspection until the entire system has been inspected. Any defects found during the inspection shall be reported in accordance with local instructions.

(4) Liquefied petroleum gas (LPG), propane or butane may not be in the same cargo space with A&E during transport. LPG, propane or butane may be used as a vehicle fuel source when it is in fuel tanks that are external to the cargo space and it complies with the vehicle safety requirements of NAVSEA OP 5 Volume 1 and NAVFAC P-300.

(5) A fuel system that uses LPG as a fuel source for the operation of a motor vehicle must conform to the "Standards for the Storage and Handling of Liquified Petroleum Gases" of the National Fire Protection Association, 470 Atlantic Avenue, Boston, MA 02110.

12k. Exhaust System. Exhaust pipe must be securely attached to exhaust manifold; gaskets or packing shall not show evidence of leakage; and other end of pipe must be clamped securely to the muffler. Muffler must be in good condition and securely mounted. Tail pipe must be securely clamped to muffler, properly supported, and unobstructed at its outer end. Exhaust system must discharge to the atmosphere at a point to rear of cab or, if the exhaust projects above the cab, at a location near the rear of the cab. Exhaust system shall not be leaking at a point forward of or directly below the driver compartment. No part of the system shall be located where it might burn or damage wires, fuel system, or any combustible part of the vehicle. The entire system shall be kept free of oil or grease accumulations. No part of the exhaust system shall be temporarily repaired with wrap or patches.

12l. Brake System. This includes hand brakes, parking brakes, and Low Air Warning devices. See 49 CFR, Chapter III, Subchapter B, Appendix G. Brakes of each vehicle shall be capable of controlling, stopping and holding the vehicle. Each vehicle shall have a mechanical parking brake capable of holding the vehicles under any condition to the limit or traction. Defects in a braking system shall be cause for rejection. Major DOT braking requirements are as follows:

(1) A control by which the driver applies the emergency brake system must be located so that the driver can readily operate it when the driver is properly restrained by any seat belt assembly provided for use. The control for applying the emergency brake system may be combined with either the control for applying the service brake system or the control for applying the parking brake system. However, all three controls may not be combined.

Item No.	Inspection Criteria

(2) Every single driven motor vehicle and every combination of motor vehicles shall at all times be equipped with a parking brake system adequate to hold the vehicle or combination on any grade on which it is operated under any condition of loading on a surface free from snow or ice.

(3) Every motor vehicle shall be equipped with brakes acting on all wheels, except trucks and truck tractors having three or more axles need not have brakes on the front wheels.

(4) Every motor vehicle, if used to tow a trailer equipped with brakes, shall be equipped with means to ensure that the service brakes on the towing vehicle will be sufficiently operative to stop the towing vehicle, should breakaway of the trailer occur.

(5) Every truck or tractor equipped with air brakes, when used for towing other vehicles equipped with air brakes, shall be equipped with two means of activating the emergency features of the trailer brakes. One of those means shall operate automatically in the event of reduction of the towing vehicle air supply to a fixed pressure which shall not be lower than 20 pounds per square inch, nor higher than 45 pounds per square inch. The other means shall be a manually controlled device readily operable by a person seated in the driving seat. Its emergency position or method of operation shall be clearly indicated. In no instance may the manual means be so arranged to permit its use to prevent operation of the automatic means. The automatic and manual means may be separate, but this is not a requirement.

(6) Brake tubing and brake hose must be as follows:

(a) Designed and constructed in a manner that ensures proper, adequate and continued functioning of the tubing or hose.

(b) Installed in a manner that ensures proper continued functioning of the tubing or hose.

(c) Long and flexible enough to accommodate without damage to all normal motions of the parts to which it is attached.

(d) Suitably secured against chafing, kinking, or other mechanical damage.

(e) Installed in a manner that prevents it from contacting the vehicle's exhaust system or any other source of high temperature.

Item No.	Inspection Criteria

(7) The tractor which is equipped with power brakes shall have the braking system arranged so that one application valve shall, when applied, operate all the service brakes on the motor vehicle or combination of motor vehicles. This requirement shall not be construed to prohibit motor vehicles from being equipped with an additional valve to be used to operate the brakes on a trailer or trailers.

(8) A truck or truck-trailer must be equipped with a signal that provides a warning to the driver when a failure occurs in the vehicle's service brake system. The warning devices must be as follows:

(a) A vehicle manufactured on or after 1 July 1973 and having service brakes activated by hydraulic fluid must be equipped with a visual or audible warning signal.

(b) A vehicle (regardless of the date it was manufactured) having service brakes activated by compressed air (air mechanical brakes) or a vehicle towing a vehicle having service brakes activated by compressed air (air mechanical brakes) must be equipped with a pressure warning device. The device must provide a readily audible or visible continuous warning to the driver whenever the pressure of the compressed air in the braking system is below a specified pressure, which must be at least one-half of the compressor governor cutout pressure (the governor cutout pressure is about 40 psi).

12m. Suspension. All springs, suspension hanger mechanisms, tension bar assemblies, and associated parts (such as U-bolts, hangers and shackles) must be in proper adjustment, properly lubricated and show no signs of fractures or breaks. Spring leafs shall not be broken or missing. Inspect for unsecured axle positioning parts, axle misalignment, or broken torsion bar springs (if so equipped). See 49 CFR, Chapter III, Subchapter B, Appendix G.

12n. Coupling Devices. Inspect without uncoupling.

(1) Fifth-wheel rocker plate and bed must be in good condition, properly assembled, adequately lubricated, and properly mounted. Kingpin lock shall operate freely and properly, lock securely, and not show excessive wear.

(2) The lower half of a fifth wheel mounted on a truck tractor converter dolly must be secure to the frame of that vehicle with properly designed brackets, mounting plates or angles and properly tightened bolts of adequate size and grade, or devices that provide equivalent security. The installation shall not cause cracking, warping, or deformation of the frame. The installation must include a device for positively preventing the lower half of the fifth wheel from shifting on the frame to which it is attached.

Item No.	Inspection Criteria

(3) The upper half of a fifth wheel must be fastened to the motor vehicle with at least the same security required for the installation of the lower half on a truck tractor or converter dolly.

(4) Every fifth wheel assembly must have a locking mechanism. The locking mechanism, and any adapter used in conjunction with it, must prevent separation of the upper and lower halves of the fifth wheel assembly unless a positive manual release is activated. The release may be located so that the driver can operate it from the cab. If a motor vehicle has a fifth wheel designed and constructed to be readily separable, the fifth wheel locking devices shall apply automatically on coupling.

(5) Pintle Hook, Drawbar, Towbar Eye and Tongue and Safety Devices: Inspect for unsecured mounting, cracks, missing or ineffective fasteners (welded repairs to pintle hook is prohibited). Ensure safety devices (chains, hooks, cables) are in serviceable condition and are properly attached.

12o. Cargo Space.

(1) Cargo space (sidewalls and floors) must be free of projecting bolts, screws, nails, or other inwardly protruding objects that might damage any package or container of AA&E.

(2) All vehicles must be constructed or equipped with adequate cargo-securing devices so that the load may be properly shored and will not penetrate the forward cargo compartment wall when subjected to maximum braking deceleration of the vehicle.

(3) Floors shall not be permeated with oil, gasoline, or other combustible or corrosive material. Floors must be tight, substantially constructed, and free of unnecessary holes and openings. The phrase "unnecessary holes" should be interpreted as meaning holes caused by deterioration of wood. Man-made holes, resulting from driven nails which secure blocking and bracing, are not cause for rejection. Further, repairs to deteriorated wood shall be made regardless of size for location of the hole; even a small, dry rotted hole on the side of the cargo bed may compromise the safety of a heavy load. A piece of ¼-inch plywood can be used for this purpose to cover the area. A safe, stable foundation, along with approved blocking and bracing, must be provided for shipments of all weights and sizes.

Item No.	Inspection Criteria

(4) Properly packaged ammunition unitized on Navy approved ferrous metal pallets may be loaded aboard vehicles equipped with ferrous metal cargo beds, provided that those unitized loads are properly secured to the bed of the vehicle. If there is a possibility of explosive exudate leakage (dust, power, or vapor), where a metal-to-metal spark could cause an accidental ignition of explosive materials and/or explosion, the cargo bed must be lined with nonferrous materials (such as wood). Skids, wood pallets and other appropriate loading devices may be considered as flooring and sufficient to meet this requirement as long as the metal nails or other fasteners used to hold a wood pallet together will not come in contact with the metal cargo bed. Cardboard or other fiber covering of paper is not permissible. Unpalletized ammunition packed in ferrous metal containers may be loaded aboard vehicles equipped with ferrous metal cargo beds, provided the load is in conformance with an existing DOD load drawing and is not liable to leakage of explosive exudate. Drop in or sprayed-on plastic bedliners are only authorized if the cargo is packaged in its approved shipping container. Special care shall be taken to secure all cargo in vehicles with plastic bedliners because of the slippery nature of the liner surface.

12p. Landing Gear. Landing gear assembly must be in good condition, correctly assembled, adequately lubricated, and properly mounted. Wheels or plates must not be broken.

12q. Tires, Wheels and Rims. See 49 CFR, Chapter III, Subchapter B, Appendix G.

(1) Tires must be properly inflated and free of bruises, breaks and blisters. Cuts or damage extending into the cord body, or tread worn smooth in the center, shall be cause for rejection. Stones between dual wheels must be removed. Tires shall be properly matched for size on dual-equipped tractors and trailers. A spare is not required, but if furnished it shall be inspected in the same manner as wheel-mounted tires. A bad spare tire is cause for rejection. Only pneumatic tires are acceptable. No motor vehicle shall be operated on any tire that has fabric exposed through the tread or sidewalls. Any tire on the front wheel of a truck or truck tractor shall have a tread with a depth of at least 4/32 of an inch when measured at any point on a major tread groove. Except as previously provided, tires shall have a tread groove pattern depth of at least 2/32 of an inch in a major tread groove. Tire tread patterns should match. Ensure that no wheel lugs are missing.

(2) If trailer has adjustable rear axles, check for misalignment and position. Look for damaged, worn, or missing parts. Check to ensure the locking pins of the sliding rear axles are fully engaged in the correct hole in the trailer's rails. Ensure that the adjustment handle is in the locked position and secured.

(3) Trucks or truck tractors with a load-carrying capacity equal to or greater than 8.25-20, 8-ply rating tires shall not be operated with regrooved tires on the front wheels. Inspect wheels and rims for cracks, unseated locking rings, broken, loose, damaged or missing lug nuts or elongated stud holes.

Item No.	Inspection Criteria
12r.	Tailgate/Doors. Refer to 49 CFR 177.835(h). Doors must close securely and have appropriate means for attaching security devices. The use of roll-up doors is permitted if rear blocking and bracing will not bear against the rear doors. All hinges must be tight in the body. There shall be no cracks or breaks in the latches or safety chains. Carrier-provided trailer door hinges and hasps will be installed to preclude removal when doors are closed and locked. Hinges and hasps shall be attached to doors by welding bolt nuts or by riveting. (1) Door Hinges: For each door hinge, a minimum of one bolt must be either welded or riveted in a manner to preclude easy removal. A bolt may also be turned inward with a nut on the inside as long as the bolt is flush with the nut. The use of cotter pin type fasteners for hinge pins is not recommended, as this device is easily removed. A bolt/ nut configuration that is welded offers a better alternative. This requirement applies to each hinge pin. Refer to DTR 4500.9-R for further detail. (2) Door Locking Hardware: On each door lever handle, seal plate, pin, and the bottom cam guide to the lock shaft - a minimum of one bolt must be either welded or riveted in a manner to preclude easy removal. A bolt may also be turned inward with the nut on the inside as long as the bolt is flush with the nut.
12s.	Tarpaulins. When an open-top, stake-body, or flatbed vehicle is used to transport AA&E, the load must be completely covered by a tarpaulin. The tarpaulin shall be of fire-and water-resistant material and securely fastened to the vehicle by rope or wire tiedown so as to fully protect the load from sparks, fire and moisture. Military motor vehicles operating on-station are exempt from the tarpaulin requirement during clear weather, but not during inclement weather, unless the exception criteria found in NAVSEA SW023-AG-WHM-010 is met. See 49 CFR 177.835(h).
12t.	Other Unsatisfactory Conditions. Any defect not listed elsewhere on DD Form 626 which may prohibit the conveyance from being loaded, shall be annotated here and described specifically on the reverse side of the form. Receiving activities shall report nonreceipt of the DD Form 836 or emergency response instructions. Also under this item, the following should be checked for defects: (1) Engine, Body, Cab and Chassis: Engine and cab compartment must be clean. There shall be no excessive oil or grease, and the cab floor shall be free of debris. Understructure of cab and chassis shall be checked for excessive grease and mud. Tractor doors must not be blocked in any way that could deny the driver free exit from either door. (2) Temperature control device (i.e. heating unit): If a vehicle transporting Class 1 A&E is equipped with a temperature control device, the device must rendered inoperable by draining or removing the fuel tank and disconnecting the power source.

Item No.	Inspection Criteria

(3) Bumper protectors: Every vehicle, except tractors, shall have bumpers, or devices serving similar purposes, which do not exceed 30 inches from the ground with the vehicle empty (measured to the bottom of the bumpers). The maximum distance between the closest points between bumpers, if more than one is used, shall not exceed 24 inches. The maximum transverse distance from the widest part of the vehicle at the rear to the bumper shall not exceed 18 inches. The bumpers shall be located not more than 24 inches forward of the extreme rear of the vehicle. The bumpers shall be substantially constructed and firmly attached.

(4) Seat belts.

(5) Lack of DD Form 1907.

(6) Speedometer. Verification that speedometer is operational may be a verbal confirmation from the driver.

(7) Portable lights, if carried as required spare equipment on motor vehicles loaded with hazardous material, shall be of the approved magazine type.

13. Inspection Results. Indicate whether the vehicle is accepted or rejected. If rejected, provide reason under “Remarks”. Equipment will be approved if deficiencies are corrected prior to loading.

14. Satellite Motor Surveillance System. For AA&E and other shipments requiring satellite surveillance, ensure that the Satellite Motor Surveillance System is operable. The DTTS Message Display Unit, when operative, will display the signal "DTTS ON". The munitions carrier driver, when practical, will position the DTTS message display unit in a manner that allows the shipping inspector or other designated shipping personnel to observe the "DTTS ON" message without climbing aboard the cab of the motor vehicle.

15. Remarks. Describe deficiencies, reasons for rejection, etc.

16. Origin Inspector Signature. Signature of originating activity's inspector is required.

17. Destination Inspector Signature. Signature of receiving activity's inspector is required.

SECTION III - POST LOADING INSPECTION

18. Loaded IAW Applicable Segregation/Compatibility Table of 49 CFR. A&E that are prohibited from being loaded, transported or stowed together are shown in table 4-1. Also refer to table 4-1 for details of noncombustible explosives in the same vehicle.

Item No.	Inspection Criteria

19. Load Properly Secured to Prevent Movement. Cargo must be arranged so that it cannot be damaged or damage others in transit. Different parts of a load that could damage each other shall be segregated, secured, and separated by bulkheads or other suitable means. Technical aspects of dunnaging are covered in MIL-STD-1320. The weight of the load shall be properly distributed. In no case shall the maximum gross axle load exceed that allowed by the states through which the shipment will move; or, as specified in the appropriate MIL-STD-1320.

20. Seals Applied to Closed Vehicle; Tarpaulin Applied on Open Equipment. Sealing requirements are described in paragraphs 3-4.5 and 4-8 of this manual. Tarpaulin requirements are given in item 12s.

21. Proper Placards Applied. Each motor vehicle used to transport A&E shall be placarded as discussed in paragraph 4-7.

22. Shipping Papers/DD Form 836 for Government Vehicle Shipments. The blanks on DD Form 836 shall be filled in by the shipping inspector, safety officer, or Transportation Officer (TO) for the cargo being transported. DD Form 836, figure 3-14, shall be given to military drivers and shall accompany the load to its destination. The identical information is provided on the shipping papers for commercial drivers. Additional instruction shall be given, as applicable, concerning seal breakage; procedures to be followed for delays, accidents, incidents or breakdowns en route, interchange of equipment, etc.

23. Copy of DD Form 626 for Driver. The driver shall receive a copy of the Motor Vehicle Inspection Report, DD Form 626 for a truckload shipment, whether or not the vehicle is accepted or rejected. If the vehicle is accepted, the original report, together with the cargo document and other shipping papers, shall be delivered to the receiving activity. If equipment is interchanged, the original of the DD Form 626 shall be given to the interchange driver. In the event the vehicle is rejected, the driver shall be given a copy of the form for record purposes. The original report indicating origin and destination inspection shall be forwarded to the TO to be filed with the appropriate BL.

24. Shipped under DOT Special Permit (DOT-SP-868). Classified explosives shipments are made under this special permit for transportation in commerce of certain Class/Division 1.1 through 1.3 A&E. Checking this item signifies that the shipment was loaded in compliance with the carrier's advice on maximum weight and that the driver has not inspected the load. The driver is relieved of the requirements under items 18 and 19 on DD Form 626.

A-2. COMPLETION OF DD FORM 626.

At the conclusion of the required inspections, the vehicle will be approved or rejected and the form (figure 3-4) will be signed as follows:

a. Approved/Rejected Blocks. Check the appropriate block in Section II, item 13 as to whether the vehicle is approved or rejected. If rejected, give reasons in the “Remarks” section.

b. Signature of Inspectors. Section III, items 25 and 27: These spaces shall be signed at the origin and destination by the person making the inspection.

c. Driver's Signature. Section III, items 26 and 28: These spaces shall be signed by the driver of the inspected vehicle at the origin, whether the vehicle is accepted or rejected, and at the destination.

APPENDIX B

CRITERIA FOR INSPECTION OF RAILCARS

DETAILED INSTRUCTIONS FOR COMPLETING NAVSEA FORM 8023/3

Deleted during Rev. 6.
Moved to NAVSEA SW023-AK-SAF-010

This page left intentionally blank

APPENDIX C

GENERAL INSTRUCTIONS FOR COMPLETION OF MOTOR VEHICLE ACCIDENT REPORT, STANDARD FORM (SF) 91

C-1. INTRODUCTION.

This appendix provides detailed instructions on the correct preparation of the Motor Vehicle Accident Report, SF 91. This form is divided into 13 sections, and is illustrated in figure 3-18.

SECTION I - FEDERAL VEHICLE DATA

1. Driver's Name. The driver shall print full name.

2. Driver's License No./State/Limitations. Enter the state permit number, not the government permit number. This applies to both military and civilian drivers.

3. Date of Accident. Enter the day, month and year.

4a. Department/Federal Agency Permanent Office Address. The driver will enter the name and location of the organization to which assigned.

4b. Work Telephone Number. The driver will enter the telephone number of place of employment.

5. Tag or Identification Number. Enter the vehicle license number or vehicle ID #.

6. Estimated Repair Cost. The driver shall provide an estimate of what it would cost to have the vehicle repaired.

7. Year of Vehicle. This information is located on the registration card or trip ticket, or inside of the driver's door on the data place.

8. Make of Vehicle. Enter the make of the vehicle, i.e. Ford, Dodge, Chevy, etc.

9. Model of Vehicle. Enter the model of the vehicle, i.e. F150, Taurus, etc.

10. Seat Belts Used. Were the driver and passenger wearing seat belts? Answer Yes or No.

11. Describe Vehicle Damage. List the parts of the vehicle that were damaged. Begin with the major damage and include all other damage, no matter how small. Example: LEFT FRONT FENDER DENTED SLIGHTLY.

SECTION II - OTHER VEHICLE DATA

12. Driver's Name. Enter the full name of the vehicle driver.

13. Social Security No./Tax Identification No. Enter social security number or tax identification number for the vehicle driver.

14. Driver's License Number/State/Limitations. Enter the license number, state of issue, and any restrictions or limitations noted on the license.

15a. Driver's Work Address. Enter the work address of the driver of the other vehicle (city, state and zip).

15b. Work Telephone Number. Enter the other driver's work telephone number including area code.

16a. Driver's Home Address. Enter the home address of the driver of the other vehicle (city, state and zip).

16b. Driver's Home Telephone Number. Enter the other driver's home telephone number including area code.

17. Describe Vehicle Damage. List the parts of the vehicle that were damaged. Begin with the major damage and include all other damage, no matter how small. Example: LEFT REAR FENDER AND BUMPER DENTED SLIGHTLY.

18. Estimated Repair Cost. The driver shall provide an estimate of cost to have the other vehicle repaired.

19. Year of Vehicle. This information is found on the registration card or inside the driver's door on the data plate of the other vehicle.

20. Make of Vehicle. Enter the make of the other vehicle, i.e. Ford, Dodge, Chevy, etc.

21. Model of Vehicle. Enter the model of the other vehicle, i.e. F150, Taurus, etc.

22. Tag Number and State. This information should be obtained from the vehicle registration card and verified to be the same as the license tag on the other vehicle.

23a. Driver's Insurance Company Name and Address. Provide the name and address of the other vehicle's insurance provider. If federal, state or local government, list political subdivision and agency.

23b. Policy Number. Enter the number of the insurance policy covering the other vehicle.

23c. Telephone Number. Enter the telephone number of the insurance provider for the other vehicle.

24. Vehicle Is: Check appropriate box.

25a. Owner's Name(s). If same as driver, state SAME AS DRIVER.

25b. Telephone Number. Owner's telephone number.

26. Owner's Address(es). If same as driver, state SAME AS DRIVER. Otherwise list full address as it appears on registration.

SECTION III - KILLED OR INJURED

27. Name. State the full name of the injured or deceased person(s).

28. Sex. State the sex of the injured or deceased person(s).

29. Date of Birth. Provide the date of birth of the injured or deceased person(s).

30. Address. Provide the full address of the injured or deceased person(s).

31. Mark “X” in Appropriate Boxes. Mark those which apply.

32. In Which Vehicle. Vehicle in which the injured or deceased person was riding.

33. Location in Vehicle. Location in which the injured or deceased person was riding prior to the accident.

34. First Aid Given By. Name of individual(s) or organization providing first aid to the injured person(s).

35. Transported By. Organization transporting injured person(s).

36. Transported To. Location to which injured person(s) was transported for medical treatment.

37. Same as 27.

38. Same as 28.

39. Same as 29.

40. Same as 30.

41. Same as 31.

42. Same as 32.

43. Same as 33.

44. Same as 34.

45. Same as 35.

46. Same as 36.

47a. Name of Street or Highway. Give the name and route number of the street or highway on which the accident occurred and of the nearest cross street or landmark.

47b. Direction of Pedestrian. Direction in which pedestrian was walking, give landmarks, if possible (from and to blocks).

47c. Describe What Pedestrian Was Doing at the Time of Accident. Give all pertinent information.

SECTION IV - ACCIDENT TIME AND LOCATION

48. Date of Accident. Date the accident occurred.

49. Place of Accident. Location of accident (street address, city, state, zip code, distance to nearest intersection, nearest landmark, kind of locality (industrial, business, residential, open country, etc.), road description (highway, state road, etc.).

50. Time of Accident. Time the accident occurred (a.m., p.m.).

51. Indicate on This Diagram. HOW THE ACCIDENT HAPPENED. Use symbols and arrows to describe and sketch the scene of the accident. Include landmarks.

52. Point of Impact. (Check one box for each vehicle). Check box describing where impact occurred on each vehicle.

53. Describe What Happened. Give all pertinent information.

SECTION V - WITNESS/PASSENGER

54. Name. Enter name of witness.

55. Work Telephone Number. Enter work telephone number of witness.

56. Home Telephone Number. Enter home telephone number of witness.

57. Work Address. Enter business/work address of witness.

58. Home Address. Enter home address of witness.

59. Name. Enter name of second witness.

60. Work Telephone Number. Enter work telephone number of second witness.

61. Home Telephone Number. Enter home telephone number of second witness.

62. Work Address. Enter business/work address of second witness.

63. Home Address. Enter home address of second witness.

SECTION VI - PROPERTY DAMAGE

64a. Name of Owner. Enter name of owner of property (other than vehicles) which was damaged.

64b. Work Telephone Number. Enter office/work telephone number of owner of damaged property.

64c. Home Telephone Number. Enter home telephone number of owner of damaged property.

64d. Work Address. Enter business/work address of owner of damaged property.

64e. Home Address. Enter home address of owner of damaged property.

65a. Name of Insurance Company. Name and address of the insurance provider covering the property which was damaged. If federal, state or local government, list political subdivision and agency.

65b. Telephone Number. Telephone number of insurance provider.

65c. Policy Number. Insurance policy number of insurance covering damaged property.

66. Item Damaged. Describe item which was damaged.

67. Location of Damaged Item. Current physical location of damaged item.

68. Estimated Cost. Estimate of repair cost or replacement of damaged item.

SECTION VII - POLICE INFORMATION

69a. Name of Police Officer. Enter name of police officer working the accident.

69b. Badge Number. Enter badge number of police officer working accident.

69c. Telephone Number. Enter work telephone number of police office working accident.

70. Precinct or Headquarters. Enter name of the police station to which the officer working the accident reports. Include name of department and address.

71a. Person Charged with Accident. Enter the name of the person who was charged with any violation in connection with the accident.

71b. Violation(s). Enter violation(s) for which the individual was charged.

SECTION VIII - EXTRA DETAILS

Use this area for continuation of any blocks or additional information. If a block is continued, be sure to annotate the block number.

NOTE

Please review Privacy Act Statement

SECTION IX - FEDERAL DRIVER CERTIFICATION

72a. Name and Title of Driver. PRINT your full name and your title.

72b. Driver's Signature and Date. After reviewing the completed form and the certification statement, place your legal signature and the date signed in this block.

SECTION X - DETAILS OF TRIP DURING WHICH ACCIDENT OCCURRED

73 thru 83c. Shall be completed by the driver's supervisor. These blocks are self-explanatory.

SECTION XI - ACCIDENT INVESTIGATION DATA

SECTION XII - ATTACHMENTS

SECTION XIII - COMMENTS/APPROVALS

84 thru 89f. Shall be completed by the Accident Investigator.

90a thru 90f. Prior to completion of these blocks, the accident reviewing official shall review the entire SF 91. Following review, the reviewing official shall complete blocks 90a thru 90f.

For the latest Revision of Title 49 CFR PART 397.
Please click here.

APPENDIX D

TITLE 49 CFR PART 397
TRANSPORTATION OF HAZARDOUS MATERIALS; DRIVING AND PARKING RULES
Revised 1 October 2008

SUBPART A - GENERAL

Sec.

397.1 Application of the rules in this part.
397.2 Compliance with Federal motor carrier safety regulations.
397.3 State and local laws, ordinances, and regulations.
397.5 Attendance and surveillance of motor vehicles.
397.7 Parking.
397.9 [Reserved].
397.11 Fires.
397.13 Smoking.
397.15 Fueling.
397.17 Tires.
397.19 Instructions and documents.

SUBPART B [RESERVED]

SUBPART C - ROUTING OF NON-RADIOACTIVE HAZARDOUS MATERIALS

Sec.

397.61 Purpose and scope.
397.63 Applicability.
397.65 Definitions.
397.67 Motor carrier responsibility for routing.
397.69 Highway routing designations; preemption.
397.71 Federal standards.
397.73 Public information and reporting requirements.
397.75 Dispute resolution.
397.77 Judicial review of dispute decision.

SUBPART D - ROUTING OF CLASS 7 (RADIOACTIVE) MATERIALS

Sec.

397.101 Requirements for motor carriers and drivers.
397.103 Requirements for state routing designations.

SUBPART E - PREEMPTION PROCEDURES

Sec.

397.201 Purpose and scope of the procedures.
397.203 Standards for determining preemption.
397.205 Preemption application.
397.207 Preemption notice.
397.209 Preemption processing.
397.211 Preemption determination.
397.213 Waiver of preemption application.
397.215 Waiver notice.
397.217 Waiver processing.
397.219 Waiver determination and order.
397.221 Timeliness.
397.223 Petition for reconsideration.
397.225 Judicial review.

Authority: 49 U.S.C. 322; 49 CFR 1.48 Subpart A also issued under 49 U. S. C. 31136, 31502. Subparts C, D, and E also issued under 49 U.S.C. 5112, 5125.

Source: 36 FR 4876, Mar. 13, 1971, unless otherwise noted.

* Editorial Note: Nomenclature changes to Part 397 appear at 66 FR 49874, 1 Oct 2001

SUBPART A - GENERAL

397.1 Application of the rules in this part.

(a) The rules in this part apply to each motor carrier engaged in the transportation of hazardous materials by a motor vehicle which must be marked or placarded in accordance with Part 177.823 of this title and to-

(1) Each officer or employee of the motor carrier who performs supervisory duties related to the transportation of hazardous materials; and

(2) Each person who operates or who is in charge of a motor vehicle containing hazardous materials.

(b) Each person designated in paragraph (a) of this section must know and obey the rules in this part.

[36 FR 4876, Mar. 13, 1971, as amended at 36 FR 16067, Aug. 19, 1971; 53 FR 18058, May 19, 1988; 60 FR 38749, July 28, 1995]

397.2 Compliance with Federal motor carrier safety regulations.

A motor carrier or other person to whom this part is applicable must comply with the rules in Parts 390 through 397, inclusive, of this subchapter when he/she is transporting hazardous materials by a motor vehicle which must be marked or placarded in accordance with Part 177.823 of this title.

[37 FR 18080, Sept. 7, 1972]

397.3 State and local laws, ordinances, and regulations.

Every motor vehicle containing hazardous materials must be driven and parked in compliance with the laws, ordinances, and regulations of the jurisdiction in which it is being operated, unless they are at variance with specific regulations of the Department of Transportation which are applicable to the operation of that vehicle and which impose a more stringent obligation or restraint.

397.5 Attendance and surveillance of motor vehicles.

(a) Except as provided in paragraph (b) of this section, a motor vehicle which contains a Division 1.1, 1.2, or 1.3 (explosive) material must be attended at all times by its driver or a qualified representative of the motor carrier that operates it.

(b) The rules in paragraph (a) of this section do not apply to a motor vehicle which contains Division 1.1, 1.2, or 1.3 material if all the following conditions exist-

(1) The vehicle is located on the property of a motor carrier, on the property of a shipper or consignee of the explosives, in a safe haven, or, in the case of a vehicle containing 50 pounds or less of a Division 1.1, 1.2, or 1.3 material, on a construction or survey site; and

(2) The lawful bailee of the explosives is aware of the nature of the explosives the vehicle contains and has been instructed in the procedures which must be followed in emergencies; and

(3) The vehicle is within the bailee's unobstructed field of view or is located in a safe haven.

(c) A motor vehicle which contains hazardous materials other than Division 1.1, 1.2, or 1.3 materials, and which is located on a public street or highway, or the shoulder of a public highway, must be attended by its driver. However, the vehicle need not be attended while its driver is performing duties which are incident and necessary to the driver's duties as the operator of the vehicle.

(d) For purposes of this section-

(1) A motor vehicle is attended when the person in charge of the vehicle is on the vehicle, awake, and not in a sleeper berth, or is within 100 feet of the vehicle and has it within his/her unobstructed field of view.

(2) A qualified representative of a motor carrier is a person who-

(i) Has been designated by the carrier to attend the vehicle;

(ii) Is aware of the nature of the hazardous materials contained in the vehicle he/she attends;

(iii) Has been instructed in the procedures he/she must follow in emergencies; and

(iv) Is authorized to move the vehicle and has the means and ability to do so.

(3) A safe haven is an area specifically approved in writing by local, State, or Federal governmental authorities for the parking of unattended vehicles containing Division 1.1, 1.2, or 1.3 materials.

(e) The rules in this section do not relieve the driver from any obligation imposed by law relating to the placing of warning devices when a motor vehicle is stopped on a public street or highway.

[59 FR 63925, Dec. 12, 1994]

397.7 Parking.

(a) A motor vehicle which contains Division 1.1, 1.2, or 1.3 materials must not be parked under any of the following circumstances-

(1) On or within 5 feet of the traveled portion of a public street or highway;

(2) On private property (including premises of fueling or eating facilities) without the knowledge and consent of the person who is in charge of the property and who is aware of the nature of the hazardous materials the vehicle contains; or

(3) Within 300 feet of a bridge, tunnel, dwelling, or place where people work, congregate, or assemble, except for brief periods when the necessities of operation require the vehicle to be parked and make it impracticable to park the vehicle in any other place.

(b) A motor vehicle which contains hazardous materials other than Division 1.1, 1.2, or 1.3 materials must not be parked on or within five feet of the traveled portion of a public street or highway except for brief periods when the necessities of operation require the vehicle to be parked and make it impracticable to park the vehicle in any other place.

[59 FR 63925, Dec. 12, 1994]

397.9 [Reserved]

397.11 Fires.

(a) A motor vehicle containing hazardous materials must not be operated near an open fire unless its driver has first taken precautions to ascertain that the vehicle can safely pass the fire without stopping.

(b) A motor vehicle containing hazardous materials must not be parked within 300 feet of an open fire.

397.13 Smoking.

No person may smoke or carry a lighted cigarette, cigar, or pipe on or within 25 feet of-

(a) A motor vehicle which contains Class 1 materials, Class 5 materials, or flammable materials classified as Division 2.1, Class 3, Divisions 4.1 or 4.2; or

(b) An empty tank motor vehicle which has been used to transport Class 3, flammable materials, or Division 2.1 flammable gases, which when so used, was required to be marked or placarded in accordance with the rules in Part 177.823 of this title.

[59 FR 63925, Dec. 12, 1994]

397.15 Fueling.

When a motor vehicle which contains hazardous materials is being fueled-

(a) Its engine must not be operating; and

(b) A person must be in control of the fueling process at the point where the fuel tank is filled.

397.17 Tires.

(a) A driver must examine each tire on a motor vehicle at the beginning of each trip and each time the vehicle is parked.

(b) If, as the result of an examination pursuant to paragraph (a) of this section, or otherwise, a tire is found to be flat, leaking, or improperly inflated, the driver must cause the tire to be repaired, replaced, or properly inflated before the vehicle is driven. However, the vehicle may be driven to the nearest safe place to perform the required repair, replacement, or inflation.

(c) If, as the result of an examination pursuant to paragraph (a) of this section, or otherwise, a tire is found to be overheated, the driver shall immediately cause the overheated tire to be removed and placed at a safe distance from the vehicle. The driver shall not operate the vehicle until the cause of the overheating is corrected.

(d) Compliance with the rules in this section does not relieve a driver from the duty to comply with the rules in Parts 397.5 and 397.7.

397.19 Instructions and documents.

(a) A motor carrier that transports Division 1.1, 1.2, or 1.3 (explosive) materials must furnish the driver of each motor vehicle in which the explosives are transported with the following documents:

(1) A copy of the rules in this part;

(2) [Reserved]

(3) A document containing instructions on procedures to be followed in the event of an accident or delay. The documents must include the names and telephone numbers of persons (including representatives of carriers or shippers) to be contracted, the nature of the explosives being transported, and the precautions to be taken in emergencies such as fires, accidents, or leakages.

(b) A driver who receives documents in accordance with paragraph (a) of this section must sign a receipt for them. The motor carrier shall maintain the receipt for a period of one year from the date of signature.

(c) A driver of a motor vehicle which contains Division 1.1, 1.2, or 1.3 materials must be in possession of, be familiar with, and be in compliance with-

(1) The documents specified in paragraph (a) of this section;

(2) The documents specified in Part 177.817 of this title; and;

(3) The written route plan specified in Part 397.67.

[59 FR 53925, Dec. 12, 1994, as amended at 63 FR 33280, June 18, 1998]

SUBPART B [RESERVED]

SUBPART C - ROUTING OF NON-RADIOACTIVE HAZARDOUS MATERIALS

Source: 59 FR 51830, Oct. 12, 1994, unless otherwise noted.

397.61 Purpose and scope.

This subpart contains routing requirements and procedures that States and Indian tribes are required to follow if they establish, maintain, or enforce routing designations over which a non-radioactive hazardous material (NRHM) in a quantity which requires placarding may or may not be transported by a motor vehicle. It also provides regulations for motor carriers transporting placarded or marked NRHM and procedures for dispute resolutions regarding NRHM routing designations.

397.63 Applicability.

The provisions of this subpart apply to any State or Indian tribe that establishes, maintains, or enforces any routing designations over which NRHM may or may not be transported by motor vehicle. They also apply to any motor carrier that transports or causes to be transported placarded or marked NRHM in commerce.

397.65 Definitions.

For purposes of this subpart, the following definitions apply:

Administrator. The Federal Motor Carrier Safety Administrator, who is the chief executive of the Federal Motor Carrier Safety Administration, an agency within the United States Department of Transportation, or his/her designate.

Commerce. Any trade, traffic, or transportation in the United States which:

(1) Is between a place under the jurisdiction of a State or Indian tribe and any place outside of such jurisdiction; or

(2) Is solely within a place under the jurisdiction of a State or Indian tribe but which affects trade, traffic, or transportation described in subparagraph (a).

FMCSA. The Federal Motor Carrier Safety Administration, an agency within the Department of Transportation.

Hazardous Material. A substance or material, including a hazardous substance, which has been determined by the Secretary of Transportation to be capable of posing an unreasonable risk to health, safety, or property when transported in commerce, and which has been so designated.

Indian tribe. Has the same meaning as contained in Section 4 of the Indian Self-Determination and Education Act, 25 U.S.C. 450b.

Motor carrier. A for-hire motor carrier or a private motor carrier of property. The term includes a motor carrier's agents, officers and representatives as well as employees responsible for hiring, supervising, training, assigning, or dispatching of drivers.

Motor vehicle. Any vehicle, machine, tractor, trailer, or semitrailer propelled or drawn by mechanical power and used upon the highways in the transportation of passengers or property, or any combination thereof.

NRHM. A non-radioactive hazardous material transported by motor vehicle in types and quantities which require placarding, pursuant to Table 1 or 2 of 49 CFR 172.504.

Political subdivision. A municipality, public agency or other instrumentality of one or more States, or a public corporation, board, or commission established under the laws of one or more States.

Radioactive material. Any material having a specific activity greater than 0.002 microcuries per gram (uCi/g), as defined in 49 CFR 173.403.

Routing agency. The State highway agency or other State agency designated by the Governor of that State, or an agency designated by an Indian tribe, to supervise, coordinate, and approve the NRHM routing designations for that State or Indian tribe.

Routing designations. Any regulation, limitation, restriction, curfew, time of travel restriction, lane restriction, routing ban, port-of-entry designation, or route weight restriction, applicable to the highway transportation of NRHM over a specific highway route or portion of a route.

Secretary. The Secretary of Transportation.

State. A State of the United States, the District of Columbia, the Commonwealth of Puerto Rico, the Commonwealth of the Northern Mariana Islands, the Virgin Islands, American Samoa or Guam.

397.67 Motor carrier responsibility for routing.

(a) A motor carrier transporting NRHM shall comply with NRHM routing designations of a State or Indian tribe pursuant to this subpart.

(b) A motor carrier carrying hazardous materials required to be placarded or marked in accordance with 49 CFR 177.823 and not subject to a NRHM routing designation pursuant to this subpart, shall operate the vehicle over routes which do not go through or near heavily populated areas, places where crowds are assembled, tunnels, narrow streets or alleys, except where the motor carrier determines that:

(1) There is no practicable alternative;

(2) A reasonable deviation is necessary to reach terminals, points of loading and unloading, facilities for food, fuel, repairs, rest, or a safe haven; or

(3) A reasonable deviation is required by emergency conditions, such as a detour that has been established by a highway authority, or a situation exists where a law enforcement official requires the driver to take an alternative route.

(c) Operating convenience is not a basis for determining whether it is practicable to operate a motor vehicle in accordance with paragraph (b) of this section.

(d) Before a motor carrier requires or permits a motor vehicle containing explosives in Class 1, Divisions 1.1, 1.2, 1.3, as defined in 49 CFR 173.50 and 173.53 respectively, to be operated, the carrier or its agent shall prepare a written route plan that complies with this section and shall furnish a copy to the driver. However, the driver may prepare the written plan as agent for the motor carrier when the trip begins at a location other than the carrier's terminal.

397.69 Highway routing designations; preemption.

(a) Any State or Indian tribe that establishes or modifies a highway routing designation over which NRHM may or may not be transported on or after November 14, 1994, and maintains or enforces such designation, shall comply with the highway routing standards set forth in Part 397.71 of this subpart. For purposes of this subpart, any highway routing designation affecting the highway transportation of

NRHM, made by a political subdivision of a State is considered as one made by that State, and all requirements of this subpart apply.

(b) Except as provided in Parts 397.75 and 397.219, a NRHM route designation made in violation of paragraph (a) of this section is preempted pursuant to section 105(b)(4) of the Hazardous Materials Transportation Act (49 U.S.C. app. 1804(b)(4)). This provision shall become effective after November 14, 1996.

(c) A highway routing designation established by a State, political subdivision, or Indian tribe before November 14, 1994 is subject to preemption in accordance with the preemption standards in paragraphs (a)(1) and (a)(2) of Part 397.203 of this subpart.

(d) A State, political subdivision, or Indian tribe may petition for a waiver of preemption in accordance with Part 397.213.

397.71 Federal standards.

(a) A State or Indian tribe shall comply with the Federal standards under paragraph (b) of this section when establishing, maintaining, or enforcing specific NRHM routing designations over which NRHM may or may not be transported.

(b) The Federal standards are as follows:

(1) *Enhancement of public safety.* The State or Indian tribe shall make a finding, supported by the record to be developed in accordance with paragraphs (b)(2)(ii) and (b)(3)(iv) of this section, that any NRHM routing designation enhances public safety in the areas subject to its jurisdiction and in other areas which are directly affected by such highway routing designation. In making such a finding, the State or Indian tribe shall consider:

(i) The factors listed in paragraph (b)(9) of this section; and

(ii) The DOT "Guidelines for Applying Criteria to Designate Routes for Transporting Hazardous Materials," DOT/RSPA/OHMT-89-02, July 1989[1] or its most current version; or an equivalent routing analysis which adequately considers overall risk to the public.

(2) *Public participation.* Prior to the establishment of any NRHM routing designation, the State or Indian tribe shall undertake the following actions to ensure participation by the public in the routing process:

(i) The State or Indian tribe shall provide the public with notice of any proposed NRHM routing designation and a 30-day period in which to comment. At any time during this period or following review of the comments received, the State or Indian tribe shall decide whether to hold a public hearing on the proposed NRHM route designation. The public shall be given 30 days prior notice of the public hearing which shall be conducted as described in paragraph (b)(2)(ii) of this section. Notice for both the comment period and the public hearing, if one is held, shall be given by publication in at least two newspapers of general circulation in the affected area or areas and shall contain a complete description of the proposed routing designation, together with the date, time, and location of any public hearings. Notice for both the comment period and any public hearing may also be published in the official register of the State.

(ii) If it is determined that a public hearing is necessary, the State or Indian tribe shall hold at least one public hearing on the record during which the public will be afforded the opportunity to present their views and any information or data related to the proposed NRHM routing designation. The State shall make available to the public, upon payment of prescribed costs, copies of the transcript of the hearing, which shall include all exhibits and documents presented during the hearing or submitted for the record.

[1] This document may be obtained from Office of Enforcement and Compliance (MC-EC), Federal Motor Carrier Safety Administration, U.S. Department of Transportation, 1200 New Jersey Ave., SE., Washington, DC 20590-0001.

(3) *Consultation with others.* Prior to the establishment of any NRHM routing designation, the State or Indian tribe shall provide notice to, and consult with, officials of affected political subdivisions, States and Indian tribes, and any other affected parties. Such actions shall include the following:

(i) At least 60 days prior to establishing a routing designation, the State or Indian tribe shall provide notice, in writing, of the proposed routing designation to officials responsible for highway routing in all other affected States or Indian tribes. A copy of this notice may also be sent to all affected political subdivisions. This notice shall request approval, in writing, by those States or Indian tribes, of the proposed routing designations. If no response is received within 60 days from the day of receipt of the notification of the proposed routing designation, the routing designation shall be considered approved by the affected State or Indian tribe.

(ii) The manner in which consultation under this paragraph is conducted is left to the discretion of the State or Indian tribe.

(iii) The State or Indian tribe shall attempt to resolve any concern or disagreement expressed by any consulted official related to the proposed routing designation.

(iv) The State or Indian tribe shall keep a record of the names and addresses of the officials notified pursuant to this section and of any consultation or meeting conducted with these officials or their representatives. Such record shall describe any concern or disagreement expressed by the officials and any action undertaken to resolve such disagreement or address any concern.

(4) *Through routing.* In establishing any NRHM routing designation, the State or Indian tribe shall ensure through highway routing for the transportation of NRHM between adjacent areas. The term “through highway routing” as used in this paragraph means that the routing designation must ensure continuity of movement so as to not impede or unnecessarily delay the transportation of NRHM. The State or Indian tribe shall utilize the procedures established in paragraphs (b)(2) and (b)(3) of this section in meeting these requirements. In addition, the State or Indian tribe shall make a finding, supported by a risk analysis conducted in accordance with paragraph (b)(1) of this section, that the routing designation enhances public safety. If the risk analysis shows-

(i) That the current routing presents at least 50 percent more risk to the public than the deviation under the proposed routing designation, then the proposed routing designation may go into effect.

(ii) That the current routing presents a greater risk but less than 50 percent more risk to the public than the deviation under the proposed routing restriction, then the proposed routing restriction made by a State or Indian tribe shall only go into effect if it does not force a deviation of more than 25 miles or result in an increase of more than 25 percent of that part of a trip affected by the deviation, whichever is shorter, from the most direct route through a jurisdiction as compared to the intended deviation.

(iii) That the current route has the same or less risk to the public than the deviation resulting from the proposed routing designation, then the routing designation shall not be allowed.

(5) *Agreement of other States; burden on commerce.* Any NRHM routing designation which affects another State or Indian tribe shall be established, maintained, or enforced only if:

(i) It does not unreasonably burden commerce, and

(ii) It is agreed to by the affected State or Indian tribe within 60 days of receipt of the notice sent pursuant to paragraph (b)(3)(i) of this section, or it is approved by the Administrator pursuant to Part 397.75.

(6) *Timeliness.* The establishment of a NRHM routing designation by any State or Indian tribe shall be completed within 18 months of the notice given in either paragraph (b)(2) or (b)(3) of this section, whichever occurs first.

(7) *Reasonable routes to terminals and other facilities.* In establishing or providing for reasonable access to and from designated routes, the State or Indian tribe shall use the shortest practicable route considering the factors listed in paragraph (b)(9) of this section. In establishing any NRHM routing designation, the State or Indian tribe shall provide reasonable access for motor vehicles transporting NRHM to reach:

(i) Terminals,

(ii) Points of loading, unloading, pickup and delivery, and

(iii) Facilities for food, fuel, repairs, rest, and safe havens.

(8) *Responsibility for local compliance.* The States shall be responsible for ensuring that all of their political subdivisions comply with the provisions of this subpart. The States shall be responsible for resolving all disputes between such political subdivisions within their jurisdiction. If a State or any political subdivision thereof, or an Indian tribe chooses to establish, maintain, or enforce any NRHM routing designation, the Governor, or Indian tribe, shall designate a routing agency for the State or Indian tribe, respectively. The routing agency shall ensure that all NRHM routing designations within its jurisdiction comply with the Federal standards in this section. The State or Indian tribe shall comply with the public information and reporting requirements contained in Part 397.73.

(9) *Factors to consider.* In establishing any NRHM routing designation, the State or Indian tribe shall consider the following factors:

(i) *Population density.* The population potentially exposed to a NRHM release shall be estimated from the density of the residents, employees, motorists, and other persons in the area, using United States census tract maps or other reasonable means for determining the population within a potential impact zone along a designated highway route. The impact zone is the potential range of effects in the event of a release. Special populations such as schools, hospitals, prisons, and senior citizen homes shall, among other things, be considered when determining the potential risk to the population along a highway routing. Consideration shall be given to the amount of time during which an area will experience a heavy population density.

(ii) *Type of highway.* The characteristics of each alternative NRHM highway routing designation shall be compared. Vehicle weight and size limits, underpass and bridge clearances, roadway geometrics, number of lanes, degree of access control, and median and shoulder structures are examples of characteristics which a State or Indian tribe shall consider.

(iii) *Types and quantities of NRHM.* An examination shall be made of the type and quantity of NRHM normally transported along highway routes which are included in a proposed NRHM routing designation, and consideration shall be given to the relative impact zone and risks of each type and quantity.

(iv) *Emergency response capabilities.* In consultation with the proper fire, law enforcement, and highway safety agencies, consideration shall be given to the emergency response capabilities which may be needed as a result of a NRHM routing designation. The analysis of the emergency response capabilities shall be based upon the proximity of the emergency response facilities and their capabilities to contain and suppress NRHM releases within the impact zones.

(v) *Results of consultation with affected persons.* Consideration shall be given to the comments and concerns of all affected persons and entities provided during public hearings and consultations conducted in accordance with this section.

(vi) *Exposure and other risk factors.* States and Indian tribes shall define the exposure and risk factors associated with any NRHM routing designations. The distance to sensitive areas shall be considered. Sensitive areas include, but are not limited to, homes and commercial buildings, special populations in hospitals, schools, handicapped facilities, prisons and stadiums; water sources such as streams and lakes; and natural areas such as parks, wetlands, and wildlife reserves.

(vii) *Terrain considerations.* Topography along and adjacent to the proposed NRHM routing designation that may affect the potential severity of an accident, the dispersion of the NRHM upon release and the control and clean-up of NRHM if released shall be considered.

(viii) *Continuity of routes.* Adjacent jurisdictions shall be consulted to ensure routing continuity for NRHM across common borders. Deviations from the most direct route shall be minimized.

(ix) *Alternative routes.* Consideration shall be given to the alternative routes to, or resulting from, any NRHM route designation. Alternative routes shall be examined, reviewed, or evaluated to the extent necessary to demonstrate that the most probable alternative routing resulting from a routing designation is safer than the current routing.

(x) *Effects on commerce.* Any NRHM routing designation made in accordance with this subpart shall not create an unreasonable burden upon interstate or intrastate commerce.

(xi) *Delays in transportation.* No NRHM routing designations may create unnecessary delays in the transportation of NRHM.

(xii) *Climatic conditions.* Weather conditions unique to a highway route such as snow, wind, ice, fog, or other climatic conditions that could affect the safety of a route, the dispersion of the NRHM upon release, or increase the difficulty of controlling it and cleaning it up shall be given appropriate consideration.

(xiii) *Congestion and accident history.* Traffic conditions unique to a highway routing such as: traffic congestion; accident experience with motor vehicles, traffic considerations that could affect the potential for an accident, exposure of the public to any release, ability to perform emergency response operations, or the temporary closing of a highway for cleaning up any release shall be given appropriate consideration.

397.73 Public information and reporting requirements.

(a) *Public information.* Information on NRHM routing designations must be made available by the State and Indian tribes to the public in the form of maps, lists, road signs or some combination thereof. If road signs are used, those signs and their placements must comply with the provisions of the Manual on Uniform Traffic Control Devices,[2] published by the FMCSA, particularly the Hazardous Cargo signs identified as R14-2 and R14-3 shown in Section 2B-43 of that Manual.

(b) *Reporting and publishing requirements.* Each State or Indian tribe, through its routing agency, shall provide information identifying all NRHM routing designations which exist within their jurisdictions on November 14, 1994 to the FMCSA, Office of Enforcement and Compliance (MC-EC), 1200 New Jersey Ave., SE., Washington, D.C. 20590-0001 by March 13, 1995. The State or Indian tribe shall include descriptions of these routing designations, along with the dates they were established. This information may also be published in each State's official register of State regulations. Information on any subsequent changes or new NRHM routing designations shall be furnished within 60 days after

[2]This publication may be purchased from the Superintendent of Documents, U.S. Government Printing Office (GPO), Washington, D.C. 20402 and has stock number 050-001-81001-8. It is available for inspection and copying as prescribed in 49 CFR Part 7, Appendix D. See 23 CFR Part 655, Subpart F.

establishment to the FMCSA. This information will be available from the FMCSA, consolidated by the FMCSA, and published annually in whole or as updates in the FEDERAL REGISTER. Each State may also publish this information in its official register of State regulations.

(Approved by the Office of Management and Budget under control number 2125-0554).

397.75 Dispute resolution.

(a) *Petition.* One or more States or Indian tribes may petition the Administrator to resolve a dispute relating to an agreement on a proposed NRHM routing designation. In resolving a dispute under these provisions, the Administrator will provide the greatest level of safety possible without unreasonably burdening commerce, and ensure compliance with the Federal standards established at Part 397.71 of this subpart.

(b) *Filing.* Each petition for dispute resolution filed under this section must:

(1) Be submitted to the Administrator, Federal Motor Carrier Safety Administration, U.S. Department of Transportation, 1200 New Jersey Ave., SE., Washington, DC 20590-0001. Attention: Office of the Chief Counsel (MC-CC).

(2) Identify the State or Indian tribe filing the petition and any other State, political subdivision, or Indian tribe whose NRHM routing designation is the subject of the dispute.

(3) Contain a certification that the petitioner has complied with the notification requirements of paragraph (c) of this section, and include a list of the names and addresses of each State, political subdivision, or Indian tribe official who was notified of the filing of the petition.

(4) Clearly set forth the dispute for which resolution is sought, including a complete description of any disputed NRHM routing designation and an explanation of how the disputed routing designation affects the petitioner or how it impedes through highway routing. If the routing designation being disputed results in alternative routing, then a comparative risk analysis for the designated route and the resulting alternative routing shall be provided.

(5) Describe any actions taken by the State or Indian tribe to resolve the dispute.

(6) Explain the reasons why the petitioner believes that the Administrator should intervene in resolving the dispute.

(7) Describe any proposed actions that the Administrator should take to resolve the dispute and how these actions would provide the greatest level of highway safety without unreasonably burdening commerce and would ensure compliance with the Federal standards established in this subpart.

(c) *Notice.* (1) Any State or Indian tribe that files a petition for dispute resolution under this subpart shall mail a copy of the petition to any affected State, political subdivision, or Indian tribe, accompanied by a statement that the State, political subdivision, or Indian tribe may submit comments regarding the petition to the Administrator within 45 days. (2) By serving notice on any other State, political subdivision, or Indian tribe determined by the Administrator to be possibly affected by the issues in dispute or the resolution sought, or by publication in the FEDERAL REGISTER, the Administrator may afford those persons an opportunity to file written comments on the petition. (3) Any affected State, political subdivision, or Indian tribe submitting written comments to the Administrator with respect to a petition filed under this section shall send a copy of the comments to the petitioner and certify to the Administrator as to having complied with this requirement. The Administrator may notify other persons participating in the proceeding of the comments and provide an opportunity for those other persons to respond.

(d) *Court actions.* After a petition for dispute resolution is filed in accordance with this section, no court action may be brought with respect to the subject matter of such dispute until a final

decision has been issued by the Administrator or until the last day of the one-year period beginning on the day the Administrator receives the petition, whichever occurs first.

(e) *Hearings; alternative dispute resolution.* Upon receipt of a petition filed pursuant to paragraph (a) of this section, the Administrator may schedule a hearing to attempt to resolve the dispute and, if a hearing is scheduled, will notify all parties to the dispute of the date, time, and place of the hearing. During the hearing the parties may offer any information pertinent to the resolution of the dispute. If an agreement is reached, it may be stipulated by the parties, in writing, and, if the Administrator agrees, made part of the decision in paragraph (f) of this section. If no agreement is reached, the Administrator may take the matter under consideration and announce his or her decision in accordance with paragraph (f) of this section. Nothing in this section shall be construed as prohibiting the parties from settling the dispute or seeking other methods of alternative dispute resolution prior to the final decision by the Administrator.

(f) *Decision.* The Administrator will issue a decision based on the petition, the written comments submitted by the parties, the record of the hearing, and any other information in the record. The decision will include a written statement setting forth the relevant facts and the legal basis for the decision.

(g) *Record.* The Administrator will serve a copy of the decision upon the petitioner and any other party who participated in the proceedings. A copy of each decision will be placed on file in the public docket. The Administrator may publish the decision or notice of the decision in the FEDERAL REGISTER.

397.77 Judicial review of dispute decision.

Any State or Indian tribe adversely affected by the Administrator's decision under Part 397.75 of this subpart may seek review by the appropriate district court of the United States under such proceeding only by filing a petition with such court within 90 days after such decision becomes final.

SUBPART D - ROUTING OF CLASS 7 (RADIOACTIVE) MATERIALS

397.101 Requirements for motor carriers and drivers.

(a) Except as provided in paragraph (b) of this section or in circumstances when there is only one practicable highway route available, considering operating necessity and safety, a carrier or any person operating a motor vehicle that contains a Class 7 (radioactive) material, as defined in 49 CFR 172.403, for which placarding is required under 49 CFR Part 172 shall:

(1) Ensure that the motor vehicle is operated on routes that minimize radiological risk;

(2) Consider available information on accident rates, transit time, population density and activities, and the time of day and the day of week during which transportation will occur to determine the level of radiological risk, and

(3) Tell the driver which route to take and that the motor vehicle contains Class 7 (radioactive) materials.

(b) Except as otherwise permitted in this paragraph and in paragraph (f) of this section, a carrier or any person operating a motor vehicle containing a highway route controlled quantity of Class 7 (radioactive) materials, as defined in 49 CFR 173.403(l), shall operate the motor vehicle only over preferred routes.

(1) For purposes of this subpart, a preferred route is an Interstate System highway for which an alternative route is not designated by a State routing agency; a State-designated route selected by a State routing agency pursuant to Part 397.103; or both of the above.

(2) The motor carrier or the person operating a motor vehicle containing a highway route controlled quantity of Class 7 (radioactive) materials, as defined in 49 CFR 173.403(l) and (y), shall select routes to reduce time in transit over the preferred route segment of the trip. An Interstate System bypass or Interstate System beltway around a city, when available, shall be used in place of a preferred route through a city, unless a State routing agency has designated an alternative route.

(c) A motor vehicle may be operated over a route, other than a preferred route, only under the following conditions:

(1) The deviation from the preferred route is necessary to pick up or deliver a highway route controlled quantity of Class 7 (radioactive) materials, to make necessary rest, fuel or motor vehicle repair stops, or because emergency conditions make continued use of the preferred route unsafe or impossible;

(2) For pickup and delivery not over preferred routes, the route selected must be the shortest-distance route from the pickup location to the nearest preferred route entry location, and the shortest-distance route to the delivery location from the nearest preferred route exit location. Deviation from the shortest-distance pickup or delivery route is authorized if such deviation:

(i) Is based upon the criteria in paragraph (a) of this section to minimize the radiological risk; and

(ii) Does not exceed the shortest-distance pickup or delivery route by more than 25 miles and does not exceed 5 times the length of the shortest-distance pickup or delivery route.

(iii) Deviations from preferred routes, or pickup or delivery routes other than preferred routes, which are necessary for rest, fuel, or motor vehicle repair stops or because of emergency conditions, shall be made in accordance with the criteria in paragraph (a) of this section to minimize radiological risk, unless due to emergency conditions, times does not permit use of those criteria.

(d) A carrier (or a designated agent) who operates a motor vehicle which contains a package of highway route controlled quantity of Class 7 (radioactive) materials, as defined in 49 CFR 173.403(l), shall prepare a written route plan and supply a copy before departure to the motor vehicle driver and a copy to the shipper (before departure for exclusive use shipments, as defined in 49 CFR 173.403(i), or within fifteen working days following departure for all other shipments). Any variation between the route plan and routes actually used, and the reason for it, shall be reported in an amendment to the route plan delivered to the shipper as soon as practicable but within 30 days following the deviation. The route plan shall contain:

(1) A statement of the origin and destination points, a route selected in compliance with this section, all planned stops, and estimated departure and arrival times; and

(2) Telephone numbers which will access emergency assistance in each State to be entered.

(e) No person may transport a package of highway route controlled quantity of Class 7 (radioactive) materials on a public highway unless:

(1) The driver has received within the two preceding years, written training on:

(i) Requirements in 49 CFR Parts 172, 173 and 177 pertaining to the Class 7 (radioactive) materials transported; and

(ii) The properties and hazards of the Class 7 (radioactive) materials being transported; and

(iii) Procedures to be followed in case of an accident or other emergency.

(2) The driver has in his or her immediate possession a certificate of training as evidence of training required by this section, and a copy is placed in his or her qualification file (see Part 391.51 of this subchapter), showing:

(i) The driver's name and operator's license number;

(ii) The dates training was provided;

(iii) The name and address of the person providing the training;

(iv) That the driver has been trained in the hazards and characteristics of highway route controlled quantity of Class 7 (radioactive) materials; and

(v) A statement by the person providing the training that information on the certificate is accurate.

(3) The driver has in his or her immediate possession the route plan required by paragraph (d) of this section and operates the motor vehicle in accordance with the route plan.

(f) A person may transport irradiated reactor fuel only in compliance with a plan if required under 49 CFR 173.22(c) that will ensure the physical security of the material. Variation for security purposes from the requirements of this section is permitted so far as necessary to meet the requirements imposed under such a plan, or otherwise imposed by the U. S. Nuclear Regulatory Commission in 10 CFR Part 73.

(g) Except for packages shipped in compliance with the physical security requirements of the U. S. Nuclear Regulatory Commission in 10 CFR Part 73, each carrier who accepts for transportation a highway route controlled quantity of Class 7 (radioactive) material (see 49 CFR 173.401(l)), must, within 90 days following the acceptance of the package, file the following information concerning the transportation of each such package with the Office of Enforcement and Compliance (MC-EC), Federal Motor Carrier Safety Administration, 1200 New Jersey Ave., SE., Washington, DC 20590-0001;

(1) The route plan required under paragraph (d) of this section, including all required amendments reflecting the routes actually used;

(2) A statement identifying the names and addresses of the shipper, carrier and consignee; and

(3) A copy of the shipping paper or the description of the Class 7 (radioactive) material in the shipment required by 49 CFR 172.202 and 173.203.

[57 FR 44131, Sep 24, 1992, as amended at 66 FR 49874, Oct 1, 2001; 72 FR 55703, Oct 1, 2007]

397.103 Requirements for State routing designations.

(a) The State routing agency, as defined in Part 397.201(c), shall select routes to minimize radiological risk using “Guidelines for Selecting Preferred Highway Routes for Highway Route Controlled Quantity Shipments of Radioactive Materials,” or an equivalent routing analysis which adequately considers overall risk to the public. Designations must be preceded by substantive consultation with affected local jurisdictions and with any other affected States to ensure consideration of all impacts and continuity of designated routes.

(b) State routing agencies may designate preferred routes as an alternative to, or in addition to, one or more Interstate System highways, including interstate system bypasses, or Interstate System beltways.

(c) A State-designated route is effective when-

(1) The State gives written notice by certified mail, return receipt requested, to the Federal Motor Carrier Safety Administration, Office of Enforcement and Compliance (MC-EC), Attn: National Hazardous Materials Route Registry, 1200 New Jersey Ave., SE., Washington, DC 20590-0001.

(2) Receipt thereof is acknowledged in writing by the FMCSA.

(d) A list of State-designated preferred routes and a copy of the "Guidelines for Selecting Preferred Highway Routes for Highway Route Controlled Quantity Shipments of Radioactive Materials," are available upon request to Office of Enforcement and Compliance (MC-EC), 1200 New Jersey Ave., SE., Washington, DC 20590-0001.

[57 FR 44131, Sept. 24, 1992, as amended at 66 FR 49874, Oct 1, 2001; 72 FR 55703, Oct 1, 2007]

SUBPART E - PREEMPTION PROCEDURES

Source: 57 FR 44132, Sept. 24, 1992, unless otherwise noted.

397.201 Purpose and scope of the procedures.

(a) This subpart prescribes procedures by which:

(1) Any person, including a State, political subdivision thereof, or Indian tribe, directly affected by any highway routing designation for hazardous materials may apply to the Administrator for a determination as to whether that highway routing designation is preempted under 49 U.S.C. 5125, or Part. 397.69 or Part. 397.203; and

(2) A State, political subdivision thereof, or Indian tribe may apply to the Administrator for a waiver of preemption with respect to any highway routing designation that the State, political subdivision thereof, or Indian tribe acknowledges to be preempted by 49 U.S.C. 5125, or Part. 397.69 or Part. 397.203, or that has been determined by a court of competent jurisdiction to be so preempted.

(b) Unless otherwise ordered by the Administrator, an application for a preemption determination which includes an application for a waiver of preemption will be treated and processed solely as an application for a preemption determination.

(c) For purposes of this part:

Act means 49 U.S.C. 5101 *et seq.*, formerly known as the Hazardous Materials Transportation Act.

Administrator means the Federal Highway Administrator, who is the chief executive of the Federal Motor Carrier Safety Administration, an agency of the United States Department of Transportation, or his/her designate.

Hazardous material means a substance or material, including a hazardous substance, which has been determined by the Secretary of Transportation to be capable of posing an unreasonable risk to health, safety, or property, when transported in commerce, and which has been so designated.

Indian tribe has the same meaning as contained in section 4 of the Indian Self-Determination and Education Act, 25 U.S.C. 450b.

Person means an individual, firm, co-partnership, corporation, company, association, joint-stock association, including any trustee, receiver, assignee, or similar representative thereof, or government, Indian tribe, or agency or instrumentality of any government or Indian tribe when it offers hazardous materials for transportation in commerce or transports hazardous materials in furtherance of a commercial enterprise, but such term does not include the United States Postal Service.

Political subdivision includes a municipality; a public agency or other instrumentality of one or more States, or a public corporation, board, or commission established under the laws of one or more States.

Routing agency means the State highway agency or other State agency designated by the Governor of the State, or an agency designated by an Indian tribe, to supervise, coordinate, and approve the highway routing designations for that State or Indian tribe. Any highway routing designation made by a political subdivision of a State shall be considered a designation made by that State.

Routing designation includes any regulation, limitation, restriction, curfew, time of travel restriction, lane restriction, routing ban, port-of-entry designation, or route weight restriction applicable to the highway transportation of hazardous materials over a specific highway route or portion of a route.

State means a State of the United States, the District of Columbia, the Commonwealth of Puerto Rico, the Commonwealth of the Northern Mariana Islands, the Virgin Islands, American Samoa, Guam, or any other territory or possession of the United States designated by the Secretary.

[57 FR 44132, Sept. 24, 1992, as amended at 59 FR 51834, Oct. 12, 1994]

397.203 Standards for determining preemption.

(a) Any highway routing designation established, maintained, or enforced by a State, political subdivision thereof, or Indian tribe is preempted if-

(1) Compliance with both the highway routing designation and any requirement under the Act or of a regulation issued under the Act is not possible;

(2) The highway routing designation as applied or enforced creates an obstacle to the accomplishment and execution of the Act or the regulations issued under the Act; or

(3) The highway routing designation is preempted pursuant to Part 397.69(b).

(b) [Reserved].

(57 FR 44132, Sept. 24, 1992, as amended at 59 FR 51834, Oct. 12, 1994]

397.205 Preemption application.

(a) Any person, including a State, political subdivision thereof, or Indian tribe directly affected by any highway routing designation of another State, political subdivision, or Indian tribe, may apply to the Administrator for a determination of whether that highway routing designation is preempted by the Act or Part 397.203 of this subpart. The Administrator shall publish notice of the application in the FEDERAL REGISTER.

(b) Each application filed under this section for a determination must:

(1) Be submitted to the Administrator, Federal Motor Carrier Safety Administration, 1200 New Jersey Ave., SE., Washington, D.C. 20590-0001. Attention: Office of the Chief Counsel, Enforcement and Litigation Division (MC-CCE), Hazardous Materials Preemption;

(2) Set forth a detailed description of the highway routing designation of the State, political subdivision thereof, or Indian tribe for which the determination is sought;

(3) If applicable, specify the provisions of the Act or the regulations issued under the Act under which the applicant seeks preemption of the highway routing designation of the State, political subdivision thereof, or Indian tribe;

(4) Explain why the applicant believes the highway routing designation of the State, political subdivision thereof, or Indian tribe should or should not be preempted under the standards of Part 397.203; and

(5) State how the applicant is affected by the highway routing designation of the State, political subdivision thereof, or Indian tribe.

(c) The filing of an application for a determination under this section does not constitute grounds for noncompliance with any requirement of the Act or any regulation issued under the Act.

(d) Once the Administrator has published notice in the FEDERAL REGISTER of an application received under paragraph (a) of this section, no applicant for such determination may seek relief with respect to the same or substantially the same issue in any court until final action has been taken on the application or until 180 days after filing of the application, whichever occurs first. Nothing in this section shall be construed as prohibiting any person, including a State, political subdivision thereof, or Indian tribe, directly affected by any highway routing designation from seeking a determination of preemption in any court of competent jurisdiction in lieu of applying to the Administrator under paragraph (a) of this section.

[57 FR 44132, Sept. 24, 1992, as amended at 72 FR 55703, Oct 1, 2007]

397.207 Preemption notice.

(a) If the applicant is other than a State, political subdivision thereof, or Indian tribe, the applicant shall mail a copy of the application to the State, political subdivision thereof, or Indian tribe concerned, accompanied by a statement that comments may be submitted regarding the application to the Administrator within 45 days. The application filed with the Administrator must include a certification that the applicant has complied with this paragraph and must include the names and addresses of each official to whom a copy of the application was sent.

(b) The Administrator may afford interested persons an opportunity to file written comments on the application by serving notice on any persons readily identifiable by the Administrator as persons who will be affected by the ruling sought or by the publication in the FEDERAL REGISTER.

(c) Each person submitting written comments to the Administrator with respect to an application filed under this section shall send a copy of the comments to the applicant and certify to the Administrator that he or she has complied with this requirement. The Administrator may notify other persons participating in the proceeding of the comments and provide an opportunity for those other persons to respond.

397.209 Preemption processing.

(a) The Administrator may initiate an investigation of any statement in an application and utilize in his or her evaluation any relevant facts obtained by that investigation. The Administrator may solicit and accept submissions from third persons relevant to an application and will provide the applicant an opportunity to respond to all third person submissions. In evaluating an application, the Administrator may consider any other source of information. The Administrator may convene a hearing or conference, if a hearing or conference will advance the evaluation of the application.

(b) The Administrator may dismiss the application without prejudice if;

(1) he or she determines that there is insufficient information upon which to base a determination; or

(2) he or she requests additional information from the applicant and it is not submitted.

397.211 Preemption determination.

(a) Upon consideration of the application and other relevant information received, the Administrator issues a determination.

(b) Notwithstanding that an application for a determination has not been filed under Part 397.205, the Administrator, on his or her own initiative, may issue a determination as to whether a particular highway routing designation of a State, political subdivision thereof, or Indian tribe is preempted under the Act or the regulations issued under the Act.

(c) The determination includes a written statement setting forth the relevant facts and the legal basis for the determination, and provides that any person aggrieved thereby may file a petition for reconsideration within 20 days in accordance with Part 397.223.

(d) Unless the determination is issued pursuant to paragraph (b) of this section, the Administrator serves a copy of the determination upon the applicant. In all preemption determinations, the Administrator serves a copy of the determination upon any other person who participated in the proceeding or who is readily identifiable by the Administrator as affected by the determination. A copy of each determination is placed on file in the public docket. The Administrator may publish the determination or notice of the determination in the FEDERAL REGISTER.

(e) If no petition for reconsideration is filed within 20 days in accordance with Part 397.223, a determination issued under this section constitutes the final agency decision as to whether a particular highway routing designation of a State, political subdivision thereof, or Indian tribe is preempted under the Act or regulations issued thereunder. The fact that a determination has not been issued under this section with respect to a particular highway routing designation of a State, political subdivision thereof, or Indian tribe carries no implication as to whether the requirement is preempted under the Act or regulations issued thereunder.

397.213 Waiver of preemption application.

(a) Any State, political subdivision thereof, or Indian tribe may apply to the Administrator for a waiver of preemption with respect to any highway routing designation that the State, political subdivision thereof, or Indian tribe acknowledges to be preempted by the Act, Part 397.203 of this subpart, or a court of competent jurisdiction. The Administrator may waive preemption with respect to such requirement upon a determination that such requirement-

(1) Affords an equal or greater level of protection to the public than is afforded by the requirements of the Act or regulations issued under the Act, and

(2) Does not unreasonably burden commerce.

(b) Each application filed under this section for a waiver of preemption determination must:

(1) Be submitted to the Administrator, Federal Motor Carrier Safety Administration, 1200 New Jersey Ave., SE., Washington, D.C. 20590-0001. Attention: Office of the Chief Counsel, Enforcement and Litigation Division (MC-CCE), Hazardous Materials Preemption Docket;

(2) Set forth a detailed description of the highway routing designation of the State, political subdivision thereof, or Indian tribe for which the determination is being sought;

(3) Include a copy of any relevant court order or determination issued pursuant to Part 397.211;

(4) Contain an express acknowledgement by the applicant that the highway routing designation of the State, political subdivision thereof, or Indian tribe is preempted under the Act or the regulations issued under the Act, unless it has been so determined by a court of competent jurisdiction or in a determination issued under this subpart;

(5) Specify each provision of the Act or the regulations issued under the Act that preempts the highway routing designation of the State, political subdivision thereof, or Indian tribe;

(6) State why the applicant believes that the highway routing designation of the State, political subdivision thereof, or Indian tribe affords an equal or greater level of protection to the public than is afforded by the requirements of the Act or the regulations issued under the Act;

(7) State why the applicant believes that the highway routing designation of the State, political subdivision thereof, or Indian tribe does not unreasonably burden commerce; and

(8) Specify what steps the State, political subdivision thereof, or Indian tribe is taking to administer and enforce effectively the preempted requirement.

[57 FR 44132, Sept. 24, 1992, as amended at 72 FR 55703, Oct 1, 2007]

397.215 Waiver notice.

(a) The applicant State, political subdivision thereof, or Indian tribe shall mail a copy of the application and any subsequent amendments or other documents relating to the application to each person whom the applicant reasonably ascertains will be affected by the determination sought. The copy of the application must be accompanied by a statement that the person may submit comments regarding the application to the Administrator within 45 days. The application filed with the Administrator must include a certification that the application has complied with this paragraph and must include the names and addresses of each person to whom the application was sent.

(b) Notwithstanding the provisions of paragraph (a) of this section, if the State, political subdivision thereof, or Indian tribe determines that compliance with paragraph (a) of this section would be impracticable, the applicant shall:

(1) Comply with the requirements of paragraph (a) of this section with regard to those persons whom it is reasonable and practicable to notify; and

(2) Include with the application filed with the Administrator a description of the persons or class or classes of persons to whom notice was not sent.

(c) The Administrator may require the applicant to provide notice in addition to that required by paragraphs (a) and (b) of this section, or may determine that the notice required by paragraph (a) of this section is not impracticable, or that notice should be published in the FEDERAL REGISTER.

(d) The Administrator may serve notice on any other persons readily identifiable by the Administrator as persons who will be affected by the determination sought and may afford those persons an opportunity to file written comments on the application.

(e) Any person submitting written comments to the Administrator with respect to an application filed under this section shall send a copy of the comments to the applicant. The person shall certify to the Administrator that he or she has complied with the requirements of this paragraph. The Administrator may notify other persons participating in the proceeding of the comments and provide an opportunity for those other persons to respond.

397.217 Waiver processing.

(a) The Administrator may initiate an investigation of any statement in an application and utilize any relevant facts obtained by that investigation. The Administrator may solicit and accept submissions from third persons relevant to an application and will provide the applicant an opportunity to respond to all third person submissions. In evaluating an application, the Administrator may convene a hearing or conference, if a hearing or conference will advance the evaluation of the application.

(b) The Administrator may dismiss the application without prejudice if:

(1) He or she determines that there is insufficient information upon which to base a determination;

(2) Upon his or her request, additional information is not submitted by the applicant; or

(3) The applicant fails to provide the notice requires by this subpart.

(c) Except as provided in this subpart, the Administrator will only consider an application for a waiver of preemption determination if:

(1) The applicant expressly acknowledges in its application that the highway routing designation of the State, political subdivision thereof, or Indian tribe for which the determination is sought is preempted by the Act or the regulations thereunder; or

(2) The highway routing designation of the State, political subdivision thereof, or Indian tribe has been determined by a court of competent jurisdiction or in a determination issued pursuant to Part 397.211 to be preempted by the Act or the regulations issued thereunder.

(d) When the Administrator has received all substantive information necessary to process an application for a waiver of preemption determination, notice of that fact will be served upon the applicant. Additional notice to all other persons who received notice of the proceeding may be served by publishing a notice in the FEDERAL REGISTER.

397.219 Waiver determination and order.

(a) Upon consideration of the application and other relevant information received or obtained during the proceeding, the Administrator issues an order setting forth his or her determination.

(b) The Administrator may issue a waiver of preemption order only if he or she finds that the requirement of the State, political subdivision thereof, or Indian tribe affords the public a level of safety at least equal to that afforded by the requirements of the Act and the regulations issued under the Act and does not unreasonably burden commerce. In determining whether the requirement of the State, political subdivision thereof, or Indian tribe unreasonably burdens commerce, the Administrator may consider the following factors:

(1) The extent to which increased costs and impairment of efficiency result from the highway routing designation of the State, political subdivision thereof, or Indian tribe;

(2) Whether the highway routing designation of the State, political subdivision thereof, or Indian tribe has a rational basis;

(3) Whether the highway routing designation of the State, political subdivision thereof, or Indian tribe achieves its stated purpose; and

(4) Whether there is need for uniformity with regard to the subject concerned and if so, whether the highway routing designation of the State, political subdivision thereof, or Indian tribe competes or conflicts with those of other States, political subdivisions thereof, or Indian tribes.

(c) The order includes a written statement setting forth the relevant facts and the legal basis for the determination, and provides that any person aggrieved by the order may file a petition for reconsideration in accordance with Part 397.223.

(d) The Administrator serves a copy of the order upon the applicant, any other person who participated in the proceeding and upon any other person readily identifiable by the Administrator as one who may be affected by the order. A copy of each order is placed on file in the public docket. The Administrator may publish the order or notice of the order in the FEDERAL REGISTER.

(e) If no petition for reconsideration is filed within 20 days in accordance with Part 397.223, an order issued under this section constitutes the final agency decision regarding whether a particular requirement of a State, political subdivision thereof, or Indian tribe is preempted under the Act or any regulations issued thereunder, or whether preemption is waived.

397.221 Timeliness.

If the Administrator fails to take action on the application within 90 days of serving the notice required by Part 397.217(d), the applicant may treat the application as having been denied in all respects.

397.223 Petition for reconsideration.

(a) Any person aggrieved by an order issued under Part 397.211 or Part 397.219 may file a petition for reconsideration with the Administrator. The petition must be filed within 20 days of service of the determination or order issued under the above sections.

(b) The petition must contain a concise statement of the basis for seeking reconsideration, including any specific factual or legal errors, or material information not previously available.

(c) The petitioner shall mail a copy of the petition to each person who participated, either as an applicant or routing, in the waiver of preemption proceeding, accompanied by a statement that the person may submit comments concerning the petition to the Administrator within 20 days. The petition filed with the Administrator must contain a certification that the petitioner has complied with this paragraph and include the names and addresses of all persons to whom a copy of the petition was sent.

(d) The Administrator's decision under this section constitutes the final agency decision. If no petition for reconsideration is filed under this section, then the determination issued under Part 397.211 or 397.219 becomes the final agency decision at the end of the 20 day period.

397.225 Judicial review.

A party to a proceeding under Part 397.205(a), 397.213(a), or 397.223(a) may seek review by the appropriate district court of the United States of the decision of the Administrator under such proceeding only by filing a petition with such court within 60 days after the final agency decision.

INDEX

Subject — **Appendix, Paragraph, Figure, or Table Number**

A

Abbreviations 1-3.1
Ability to Read and Understand Regulations 2-2.4
Accidents, Procedures Following 5-7
Age and Experience 2-2.3
Alcohol and Drugs 2-2.2.1
Arrest of Driver 5-2.5
Automatic Revocation of Navy Driver's Permit 2-6.3

B

Blocking and Bracing 4-5.2, 4-6.1c
Brake System A-12l
Breakdown, Procedures Following 5-8
Breaking Seals En Route 5-5.2.1
Bridges 5-2.9.4
Burning-Area Operations 5-9

C

Carbon Monoxide 5-3.1
Cargo Classification and Segregation T4-1, T4-2
Cargo Compatibility 4-5.8, T4-1, T4-2
Cargo Handling Precautions 4-5.6
Cargo Securement (in-transit) 5-6c
Cargo Space 4-3.1, 6-5.1, A-12o
Civil Disturbances 5-5.4
Combat Aircraft Loading Area Ordnance Operations 2-7.6
Combination Loads, Placarding of 4-7.4
Commercial Bill of Lading 3-4.1.2
Competent Authority Approvals (CAA) 2-12
Contract Personnel (DOD) 2-2.1
Controlled Inventory Item Code (CIIC) 2-8.1.1
Convoys 5-2.9.3
Coupling Devices A-12n

D

Dangerous Goods Shipping Paper/Declaration and Emergency Response Information for Hazardous Materials Transported by Government Vehicles/Container or Vessel 3-4.4, F3-14

INDEX (Continued)

Subject — **Appendix, Paragraph, Figure, or Table Number**

Delay of More Than Five Hours 5-10
Delivery of Load 6-3
Docks, Piers and Wharves 6-3.3
Shipping or Receiving Sheds and Transfer Depots 6-3.1
Shipping Papers 6-2.1
Time Limits 6-3.2
Diesel Powered Vehicles, Warnings Regarding 4-5.5, 6-4
Disciplinary Actions and Penalties 2-6
DOT Special Permit No. 868 . . . . . A-24
Double Trailers 4-2.2
Drivers, Authorized 2-7.1
Drivers, Extra 2-7.3
Driver's License 2-2
Driver's Medical Examiner's Certificate 2-2.2, 3-2.2, F3-2
Driver's Permit 3-2.1, F3-1
Driver's Personal Papers 3-2
Driver's Personal Responsibilities 2-4
Use of Protective Equipment 2-4.1
Requesting Station Photographers 2-4.2
Driver's Responsibilities During Loading 4-4.1
Driver's Responsibilities After Loading 4-6.1
Driver's Responsibilities During Unloading 6-4
Driver's Written Instructions 4-10
Driving Hazards 5-3
Carbon Monoxide 5-3.1
Damage to Cargo 5-3.2
Weather Conditions 5-3.3
Driving in Congested/Heavily Populated Areas 5-2.9.5
Driving Regulations 5-2
Driving Hours 5-2.3
General Rules for Safe Driving 5-2.6
Instructions for Specific Situations 5-2.9
Road Signs 5-2.7
Yielding Right of Way 5-2.8
Drug Addition/Prescribed Drugs 2-2.2.1
Drunken Driving 5-2.4

E

Electrical Storms 5-3.3, 5-4.4, 5-9.3
Electrical Wiring A-12h
Emergency Lights (Red) 4-2.6

INDEX (Continued)

Subject — **Appendix, Paragraph, Figure, or Table Number**

Exhaust System A-12k
Explosives Driver's Qualifications 2-2
Ability to Read and Understand Regulations 2-2.4
Age and Experience 2-2.3
Alcohol and Drugs 2-2.2.1
Driver's Permit 2-2, 3-2.1, F3-1
Medical Examiner's Certificate 2-2.2, 3-2.2, F3-2
Mental Requirements 2-2.4
Physical Requirements 2-2.2
State License 2-2
Explosives Safety Training Requirements 2-3
Explosives Driver 12-Hour Course 2-3.1.2a
Exposure to Weather 5-4.4
Extra Drivers 2-7.3

F

Fires Along the Highway 9-4
Fire Extinguishers A-12g
Fire Extinguishers, Specifications for 9-5.1
Fire Prevention 9-3
Firefighting Equipment 9-5
Firefighting Procedures 9-6
Vehicle Fires 9-6.1
Cargo Fires 9-6.2
Summary of Emergency Response Guidelines F9-1
Flame-Producing Devices 5-4.1
Flatbed, Stake-Side or Open-Top Vehicles 4-2.4
Flight-line Ordnance Operations 2-7.6
Forbidden Materials 4-5.7
Force Protection Conditions (FPCON) 2-8.2, 5-5
Fuel System A-12j
Fully Closed Vehicles 4-2.1
Fuses, Electrical A-12a

G

General Rules for Safe Driving 5-2.6
Government Bill of Lading F3-11A
Government Bill of Lading Correction Notice F3-20
Guarding Vehicles 5-5.3

INDEX (Continued)

Subject — **Appendix, Paragraph, Figure, or Table Number**

H

Heavily Populated Areas 5-2.9.5
High Mobility Multipurpose Wheeled Vehicles (HMMWV) 4-2.4.2
Horn Operative A-12b

I

Incoming Inspection (Empty Vehicles) 4-3
Incoming Inspection (Loaded Vehicles) 6-2
Inspection Requirements by Commodity 3-3.7
Inspection in Transit 5-6
Inspection Report, DD Form 626 . . . . . 3-3.2, F3-4
Inspector's Personal Responsibilities 2-4
Instructions for Specific Situations 5-2.9
Issue Release/Receipt Document, DD Form 1348-1A 3-4.3, F3-13

L

Landing Gear A-12p
Less-than-Truckload (LTL) Shipments 6-2.7
Lights and Reflectors 12i
Lights, Red Emergency 4-2.6
Load is Secured to Prevent Movement A-19
Load Interference 5-4.5
Loading and Handling Regulations 4-5
  Blocking and Bracing 4-5.2
  Cargo Compatibility 4-5.8, T4-1, T4-2
  Cargo Handling Precautions 4-5.6
  Driver's Responsibilities During Loading 4-4.1
  Driver's Responsibilities After Loading 4-6.1
  Forbidden Materials 4-5.7
  Special Loads 4-5.4
Location and Display of Placards 4-7.2

M

Medical Examiner's Certificate 2-2.2, F3-2, A-7
Medium Tactical Vehicle Replacement (MTVR) Truck 4-2.4.3
Memorandum Receipt 3-4.8
Mental Requirements 2-2.4
Minimum Speeds 5-2.2

INDEX (Continued)

Subject — **Appendix, Paragraph, Figure, or Table Number**

Motor Equipment Utilization Record, DD Form 1970 . . . . . 3-3.1, F3-3
Motor Vehicle and Railcar Inspection Course, (AMMO-51) 2-3.1.1a
Motor Vehicle Accident Report, SF 91 . . . . . 3-5.1, F3-18, App. C
Motor Vehicle Lease A-8b
Motor Vehicle Inspections 4-3, 4-4, 4-6, 5-6, 6-2
Motor Vehicle Inspection Report, DD Form 626 . . . . . 3-3.2, F3-4, App. A
Motor Vehicle Specifications 4-2

N

Non-Compatible Items, Separation of 4-5.8, T4-1, T4-2
Notice of Navy Seals, NAVSUP Form 407 . . . . . 3-4.5, F3-15

O

Operator's Inspection Guide and Trouble Report, NAVFAC 9-11240/13 . . . . . F3-7
Organization of Manual 1-3
Outgoing Inspection (Loaded Vehicles) 4-6
Outgoing Inspection (Empty Vehicles) 6-5

P

Parking Restrictions 5-13
Passing Fires Along the Highway 9-4
Periodic Skill Updating Instructions 2-3.2
Personnel Assignments 2-7
Physical Requirements 2-2.2
Pickup Trucks 4-2.4.1
Piers (delivery at) 6-3.3
Placarding 4-7, T4-3
  Placarding Combination Loads 4-7.4
  Placarding Loads Containing One Type of Hazardous Material 4-7.3
  Placarding of Tank Motor Vehicles 4-7.5
  Location and Display 4-7.2
  Size and Shape 4-7.1
Procedures:
  For Water Transportation 5-14
  Following an Accident 5-7
  Following a Breakdown 5-8
  Burning Area Operations 5-9
  Delay of More than Five Hours 5-10

INDEX (Continued)

Subject — **Appendix, Paragraph, Figure, or Table Number**

Driving in Congested Areas 5-13.2
Parking Vehicles Loaded with Explosives 5-13
Refueling a Loaded Vehicle 5-12
Repacking or Transfer of Load in Transit 5-11
Protecting the Security of the Load 5-5
Breaking Seals on Classified Shipments 5-5.2.1
Civil Disturbances (Safe Haven) 5-5.4
Guarding Vehicles 5-5.3
Notice of Navy Seals, Seal Tags 3-4.5, 4-8, F3-15, F3-16
Protection Against Shifting Cargo 4-5.9
Purpose of Manual 1-1

Q

Qualifications for Explosives Drivers 2-2
Ability to Read and Understand Regulations 2-2.4
Age and Experience 2-2.3
Alcohol and Drugs 2-2.2.1
State License & Driver's Permit 2-2, 3-2.1, F3-1
Medical Examiner's Certificate 2-2.2, 3-2.2, F3-2
Mental Requirements 2-2.4
Physical Requirements 2-2.2

R

Receiving Sheds 6-3.1
Reckless Driving 5-2.4
Red Emergency Lights 4-2.6
Reference Documents 1-3.2
Refueling a Loaded Vehicle 5-12
Reinstatement of Driver's Permit 2-6.4
Repacking or Transfer of Load in Transit 5-11
Reporting Deficiencies in Manual 1-4
Reporting Traffic Violations or Accidents 2-6.1
Reports of Delays, Breakdowns or Damaged Containers 3-5.2
Reports of Incidents During Transit 3-5
Reports of Security Violations 3-5.3
Riders, Off-Station 2-7.3.1
Riders, On-Station 2-7.3.2
Road Signs 5-2.7
Routes/Route Plans 4-11
Rules for Safe Driving 5-2.6

INDEX (Continued)

Subject — **Appendix, Paragraph, Figure, or Table Number**

S

Safe Haven 5-5.4
Safety Equipment 4-2.5, F4-3
Safety Measures 5-4
  Exposure to Weather 5-4.4
  Flame-Producing Devices 5-4.1
  Load Interference 5-4.5
  Smoking Regulations 5-4.2
  Transporting Flammables 5-4.3
  Warning Devices 5-4.6, F5-1
  Safety Skills (maintenance) 2-3.2
Scope of Manual 1-2
Seal Notices and Tags 3-4.5, F3-15, F3-16
Seals 4-8.1
Security of the Load 5-5
Security Risk Categories 2-8.1
Security Violations, Reporting 3-5.3
Shifting Cargo (Protection Against) 4-5.9
Shipping Papers 3-4, 4-10
Shipping Regulations 4-1.1
Signature and Tally Record, DD Form 1907 . . . . . 3-4.2
Size and Shape of Placards 4-7.1
Smoking Regulations 5-4.2
Special Loads 4-5.4
Specifications for Fire Extinguishers 9-5.1
Speed Regulations 5-2.1
State License 2-2
Steering Mechanism A-12c
Stops 5-2.9.6
Storage Batteries . . . . . A-12h(2)
Suspension or Revocation of Navy Driver's Permit 2-6.2
Suspension System A-12m

T

Tailgates/Doors A-12r
Tarpaulins A-12s
Time Limits for Load Delivery 6-3.2
Tires A-12q
Tools and Tool Boxes 4-2.5.1

INDEX (Continued)

Subject — **Appendix, Paragraph, Figure, or Table Number**

Training Requirements 2-3
Transfer Depots 6-3.1
Transporting Flammables 5-4.3
Tunnels 5-2.9.1

U

Unloading the Vehicle 6-4
Unloading the Vehicle (during burning-area operations) 5-9.2
U. S. Government Motor Vehicle Operator's Identification Card, OF 346 . . . . . 3-2.1, F3-1

V

Vehicle and Equipment Operational Record, NAVMC 10627 . . . . . 3-3.3, F3-5
Vehicle Inspection 4-3
  Daily Vehicle Inspection 4-3
  Incoming Inspection (Empty Vehicles) 4-3
  Loading Inspection 4-4
  Outgoing Inspection (Loaded Vehicles) 4-6
  In-Transit Inspection 5-6
  Incoming Inspection (Loaded Vehicles) 6-2
  Outgoing Inspection (Empty Vehicles) 6-5
Vehicle Specifications 4-2

W

Warning Devices/Equipment 5-4.6, F5-1, A-12f
Weather Conditions 5-3.3
Weight Requirements 4-5.3.1
Wharves (delivery at) 6-3.3
Windshields and Wipers A-12d
Wiring A-12h
Written Instructions for Drivers 4-10
Wire Security Device 4-8.2, F4-6

Y

Yielding Right of Way 5-2.8

To expedite a response also mail a copy to: Director, Naval PHST Center, Indian Head Division Detachment Earle, 201 Highway 34, Colts Neck, NJ 07722-5023, Attn: Code E421.

Ref: NAVSEAINST 4160.3A NAVSEA S0005-AA-GYD-030/TMMP

NAVSEA/SPAWAR TECHNICAL MANUAL DEFICIENCY/EVALUATION REPORT (TMDER)

INSTRUCTION: Continue on 8 1/2" x 11" paper if additional space is needed.
1. Use this report to indicate deficiencies, problems and recommendations relating to publications.
2. For CLASSIFIED TMDERs see OPNAVINST 5510H for mailing requirements.
3. For TMDERs that affect more than one publication, submit a separate TMDER for each.
4. Submit TMDERs at website https://nsdsa2.phdnswc.navy.mil or mail to: COMMANDER, CODE 310 TMDER BLDG 1388, NAVSURFWARCENDIV NSDSA, 4363 MISSILE WAY, PORT HUENEME CA 93043-4307

1. PUBLICATION NUMBER	2. VOL/PART	3. REV. NO./DATE OR TM CH. NO./DATE	4. SYSTEM/EQUIPMENT IDENTIFICATION
NAVSEA SW020-AF-HBK-010		**6TH REV/1 JULY 2009**	

5. TITLE OF PUBLICATION	6. REPORT CONTROL NUMBER
Motor Vehicle Driver and Shipping Inspector's Handbook for Ammunition, Explosives and Related Hazardous Materials	(6 digit UIC-yy-any four: xxxxxx-03-xxxx

7. RECOMMENDED CHANGES TO PUBLICATION

7a. Page #	7b. Para #	7c. RECOMMENDED CHANGES AND REASONS

8. ORIGINATOR'S NAME AND WORK CENTER	9. DATE	10. ORIGINATOR'S EMAIL ADDRESS	11. TMMA of Manual (NSDSA will complete)

12. SHIP OR ACTIVITY Name and Address (Include UIC/CAGE/HULL)	13. Phone Numbers:	
	Commercial	(____) _____-_____
	DSN	(____) _____-_____
	FAX	(____) _____-_____