MEASURE PHASE

Course Structure: DMAIC

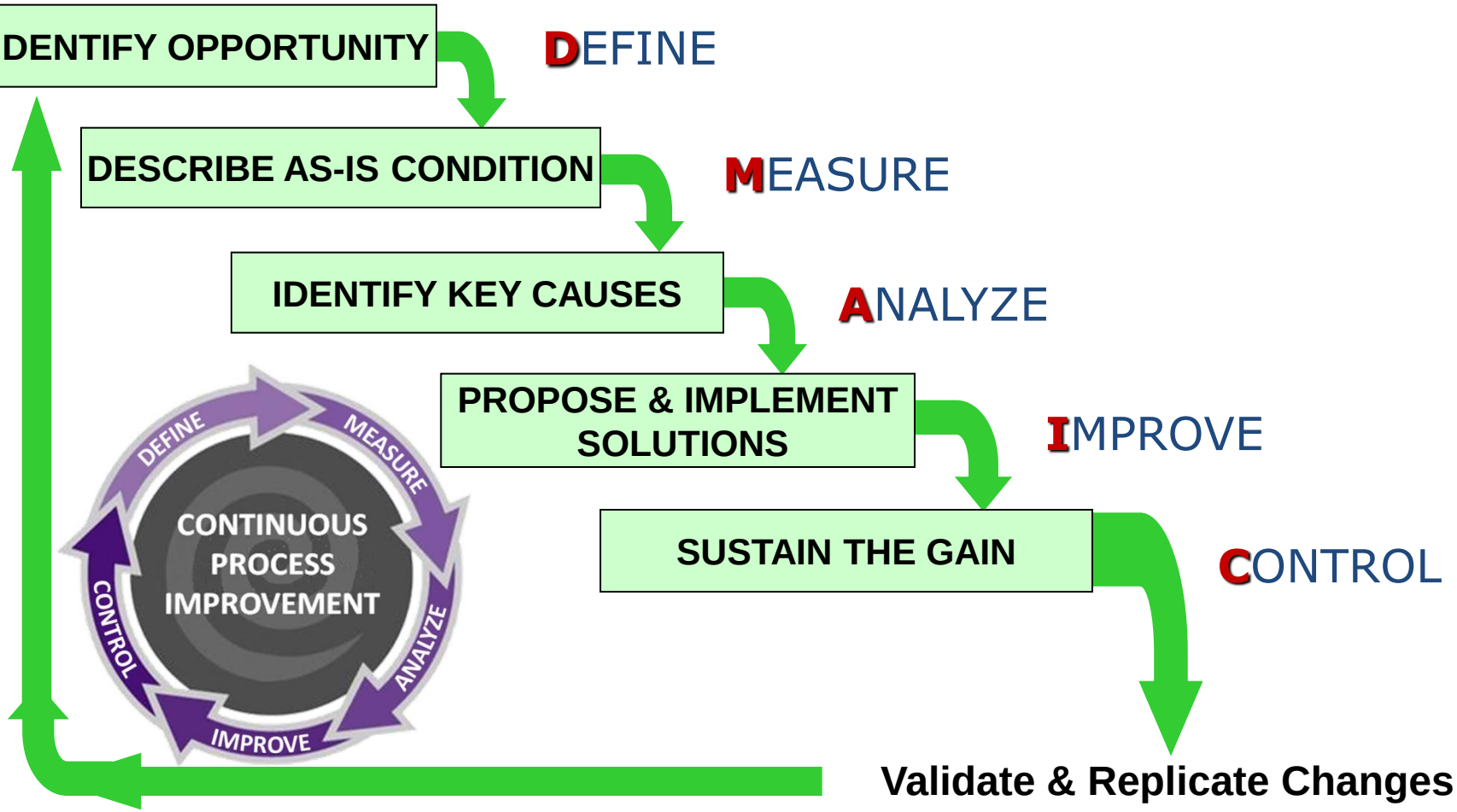

Learning Objective: Measure Phase

At the end of this lesson you will be able to:

- Understand the tools necessary to complete the Measure Phase.
- Differentiate between Data Types.
- Prepare data collection plans and apply data collecting methods.
- Understand the importance of walking the Gemba.
- Develop current and future state maps.
- Identify process steps as value added, business value and non-value added.

"You can't manage what you don't measure. What gets measured is what gets done." - Edward Deming

Data Collection

What Is a Measure?

A quantified evaluation of characteristics and / or level of performance based on observable data.

Examples include:

- Length of time (speed, age)
- Size (length, height, weight)
- Dollars (costs, sales revenue, profits)
- Counts of characteristics or “attributes” (types of customer, eye color, gender)
- Counts of defects (number of errors, late checkouts, complaints)

Used by permission, © 2007 George Group Consulting, L.P. All rights reserved

Why Measure?

- Establish the current performance level (baseline).
- Determine priorities for action – and whether or not to take action.
  - Substantiate the magnitude of the problem.
- Gain insight into potential causes of problems and changes in the process.
- Prevent problems and predict future performance.

To gain knowledge about the problem, process, customer or organization.

Used by permission, © 2007 George Group Consulting, L.P. All rights reserved

SMART Metric

- **Specific**
  - Describe outputs, knowledge, task, experience, etc.
- **Measurable**
  - Time frames are included.
  - Data can be obtained (preferably with ease).
- **Achievable**
  - Resources (knowledge, $, time, people) are available.
  - Some risk, but success is possible.
- **Relevant**
  - Link to the mission, vision, and goals.
  - Meaningful to the user.
- **Time Bound**
  - Provide step-by-step views versus giant leap.
  - Measurable at interim milestones.

What is Measurement System Analysis

- A scientific method of determining how much the variation within the measurement process contributes to overall process variability.
- Consists of a series of controlled test where measurements are collected and compared.
- Quantifies the effectiveness of the measurement system.

Why do we Care?

Significant error can be introduced into the process by the measurement system!

The process may be in statistical control but the measurement system may be introducing unacceptable variation, thus showing an out of control condition!

Measurement Systems Analysis is used to:

- Validate that a measurement system is producing "correct" values.
- Determine the source of measurement system inaccuracy for measurement system improvements.

In plain English…

- How do we know the data is good?
  - Accurate? Precise? Stable?
  - Can you trust the person collecting the data?
  - Can you trust the measurement instrument?
  - What proof do you have that the numbers reflect reality?
- Can you trust the decision you are about to make using the data that was collected?
- What is the cost if you are wrong?

Desired Measurement Properties

1. **Accuracy** – The degree of conformity of an average measured value to the standard or true value being used.

2. **Precision** – The ability to acquire the same results of a process through repeated measurements, also called Repeatability.

3. **Stability** – The ability to acquire the same average measured value of a process through repeated measurements over time.

Measurement System Error

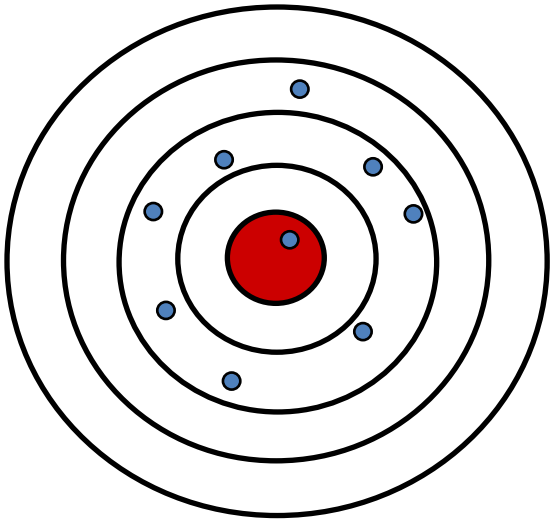

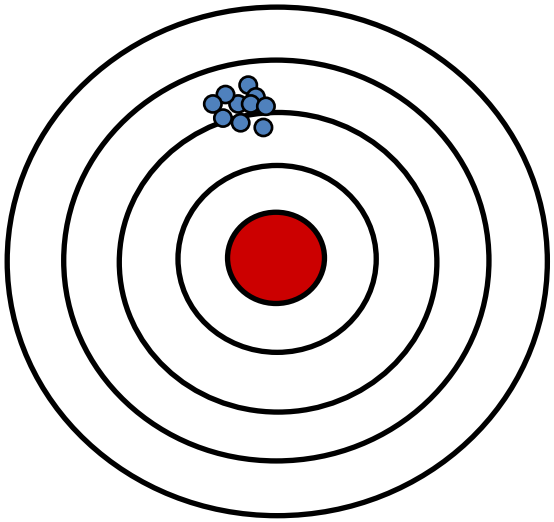

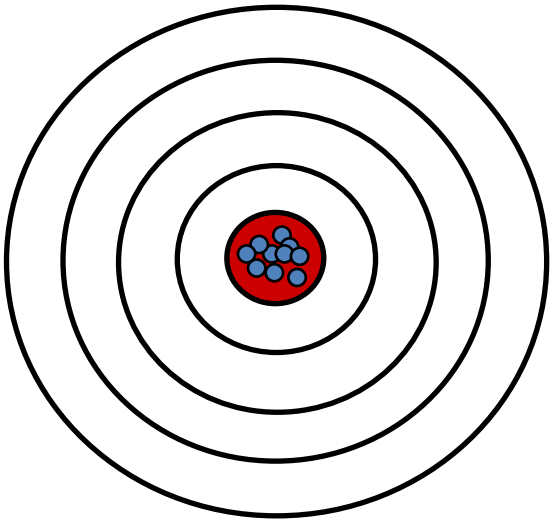

Variance Error (s^2) = Accurate but not precise

Bias Error (m) = Precise but not accurate

Little Error = Precise and accurate

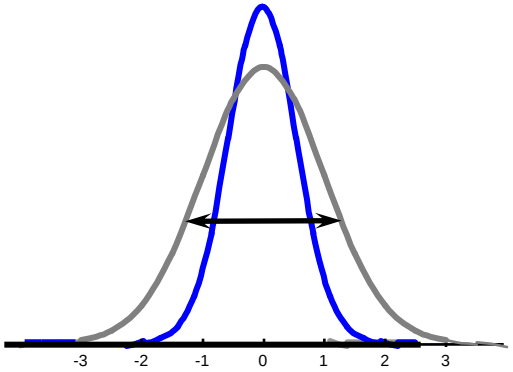

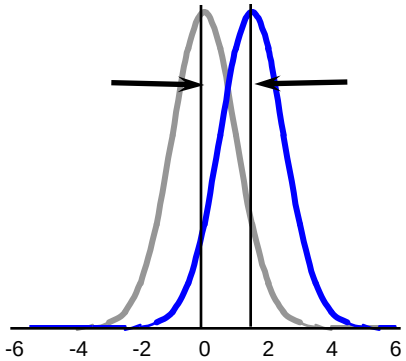

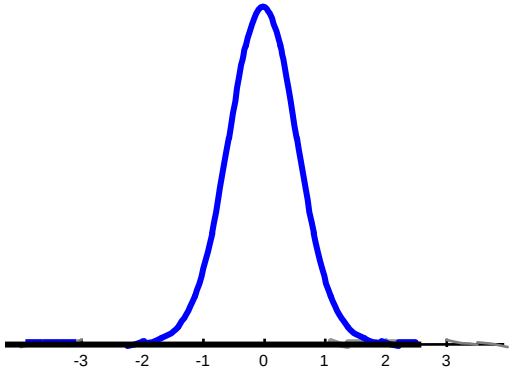

Properties of a Good Measurement System

- The measurement system must be in statistical control.
  - This means that the variation in the measurement system is due to common causes only and not due to special causes.
- Variability of the measurement system must be very small compared with the process variability.
- Variability must be very small compared with customer requirements (specification limits).

Properties of a Good Measurement System

- The increments of measure must be small relative to the smaller of either the process variability or the specification limits.
  - A common rule of thumb is for the increments to be no greater than 1/10 of the smaller of either the process variability or the specification limits.
- The statistical properties of the measurement system may change as the items measured vary.
  - The largest (worst) variation of the measurement system must be small relative to the smaller of either the process variation or the specification limits.

Indicators of a Measurement Problem

- **Lack of standards**
  - Process
  - Calibration
  - Up-keep
- **User-related**
  - Multiple techniques
  - Subjective / judgment
  - Consistent / obvious differences in results
- **General / Tool**
  - Multiple tools
  - Rechecked work is OK

Assessing Measurement System Quality

- Talk to the individuals taking the measurements.
- Have a few measurements taken and compare them to a standard.
- Have other individuals or experts verify the measurements.

Never Assume:

- The standard is always correct.
- Computer calculations are accurate.

Used by permission, © 2007 George Group Consulting, L.P. All rights reserved

Data Types

- Much information comes to us in qualitative form (job is expensive or takes too long).
- Project / Event information must be collected in quantitative form by measurements and can represent:
  - Whether something happened or not.
    - Attribute or discrete data.
  - Specifics about what happened.
    - Variable or continuous data.

Data Types

Da•ta (Da' tä, Dä'tä) *pl n.(singular or plural in number)* – Information, usually organized for analysis.

Variable Data

- Data that could be measured on an infinitely divisible scale or continuum. There are no gaps between possible values.
- Examples:

  Tire pressure (lbs/sq.in.)

  Cycle Time (minutes)

  Speed (mph)

  Length (inches)

  Response time (milliseconds)

Attribute Data

- Discrete data measures attributes, qualitative conditions, and counts. There are gaps between possible values.
- **Examples:**

  # defects per unit

  PO's placed per day

  Number of calls on hold per hour

  Shoe Size

  Number of employees

What Do We Need to Know?

The first step in the creation of any data collection plan is to decide what you need to know about your process and where to find measurement points.

- What data is needed to “baseline” our problem?
- What “upstream” factors (X’s) may affect the process – problem?
- What do we plan to do with the data after it’s gathered?

Used by permission, © 2007 George Group Consulting, L.P. All rights reserved

CTXs (Critical to Variables)

- Critical to Quality (CTQ)
- Critical to Process (CTP)
- Critical to Delivery (CTD)
- Critical to Cost (CTC)
- Critical to Safety (CTS)

Generalized → Clarified → Measurable → CTX

Exercise: CTXs

- Brainstorm potential characteristics for:
  - CTQ
  - CTP
  - CTD
  - CTC
  - CTS

10 minutes

Developing a Data Collection Plan

- **Key questions to consider:**
  - *What are we measuring?*
  - *How will we gather the data?*
  - *Who will gather the data?*
  - *When / how often will the data be gathered?*
  - *Who needs to see the data?*
  - *What is the desired or required level of performance?*

Data Collection Plan Example

Objective (Why)	Measures/ Data (What)	Data Collection Method (How)	Data Sources (Where)	Timing (When)	Responsible Party (Who)
Achieve a positive reaction to the following:	Survey questions on a scale of 1 to 5	Class evaluation form	Students	At the end of each day	Instructor

Exercise: Data Collection Plan

Objective (Why)	Measures / Data (What)	Data Collection Method (How)	Data Sources (Where)	Timing (When)	Responsible Party (Who)

10 minutes

Identify Data Sources - Existing vs. New Data

Key Question: Does the data currently exist?

- **Existing Data** – Taking advantage of archived data or current measures to learn about the Output, Process or Input.
  - This is preferred when the data is in a form we can use and the Measurement System is valid (a big assumption and concern).
- **New Data** – Capturing and recording observations we have not or don't normally capture.
  - May involve looking at the same "stuff", but with new Operational Definitions.
  - This is preferred when the data it is readily and quickly collectable (it has less concerns with measurement problems).

Used by permission, © 2007 George Group Consulting, L.P. All rights reserved

Key Considerations: Existing vs. New Data

- Is existing or "historical" data adequate?
  - Meet the Operational Definition?
  - Truly representative of the process, group?
  - Contain enough data to be analyzed?
  - Gathered with a capable Measurement System?
- Cost of gathering new data.
- Time required to gather new data.
- The trade-offs made here are significant and can have a dramatic impact on the project success.
  - Should the time and effort be taken to gather new data?
  - Should we work with what we have?

Used by permission, © 2007 George Group Consulting, L.P. All rights reserved

Data Stratification

- A data analysis technique by which data is sorted into various categories in order to surface patterns and uncover differences in processes.
- Purpose: to examine the difference in measurement values between different subgroups in an attempt to understand potential variation.
- Example: From the U.S. Census economists are often breaking out their data based on region, age, ethnicity, etc.

One category the Navy uses in stratifying data is "mission readiness" for different squadrons or carrier battle groups.

Grouping Data / Stratification

How do you decide what characteristics to stratify?

- Use CTX's as a discriminator.
- What are the key items from your SIPOC analysis?
- What does common sense or subject matter expertise tell you?

Grouping Data / Stratification

When applying data stratification, you should consider common factors.

Factor	Example
What Type	Complaints, Defects, Car Models
When	Year, Month, Week, Day
Where	Country, Region, City, Work Site
Who	Command, Department, Individual

Statistical Terminology

- **Population** - a complete set; <u>all items</u> of interest.
  - The number of elements in a population is denoted by ***N.***
- **Sample** - a <u>subset</u> of elements from the population.
  - The number of elements in the sample is denoted by ***n.***

Purpose of Sampling

- It is often impractical or too costly to collect all the data.
- Sometimes data collection is a destructive process.
- Statistics is based on the sense that we are able to draw conclusions based on looking at part of the population.
- Sound conclusions can often be made from a relatively small amount of data.

Sampling

Benefits:

- Saves time and money.
- Simplifies measurement over time.

Sampling is using a smaller group to represent the whole (the foundation of “statistics”).

Used by permission, © 2007 George Group Consulting, L.P. All rights reserved

Sampling Types

- **Population** – Drawing from a fixed group with definable boundaries. **No time element.**
- **Process** – Sampling from a changing flow of items moving through the business. **Has a time element.**

Population

- Customers
- Complaints
- Items in warehouse

Process

- New customers per week
- Hourly complaint volume
- Items received – shipped by day

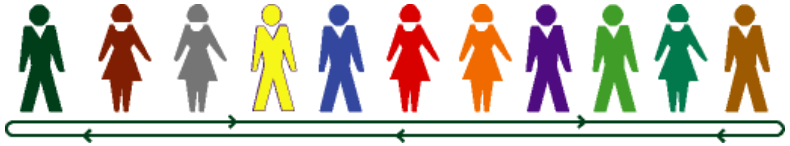

Used by permission, © 2007 George Group Consulting, L.P. All rights reserved

Sampling Biases

- Self-selection
- Self-exclusion
- Missing key representatives
- Ignoring “non-conformances”
- Grouping

Consider other biases as we talk about sampling strategies…

Used by permission, © 2007 George Group Consulting, L.P. All rights reserved

Sampling Collection - Bias Issues

- **Bias**
  - The big pitfall in sampling is **"bias"** – i.e. select a sample that does NOT really represent the whole. The sampling plan needs to guard against bias. Different methods of sampling have different advantages and disadvantages in managing bias.
- **Judgment**
  - Selecting a sample based on someone's knowledge of the process, assuming that it will be "representative". Judgment guarantees a bias, and should be avoided.
- **Convenience**
  - Sampling those items or at those times when it's easier to gather the data. (For example, taking data from people you know, or when you go for coffee.) This is another common (but ill-advised) approach.

Used by permission, © 2007 George Group Consulting, L.P. All rights reserved

Sampling Collection - Best Methods

Random

- *Best approach for Population situations.* Use a random number table or random function in Excel or other software, or draw numbers from a hat.

Systematic

- *Most practical and unbiased in a Process situation*. "Systematic" means that we select every n^{th} unit, or take samples at specific times of the day. The risk of bias comes when the timing of the sample matches a pattern in the process.

Used by permission, © 2007 George Group Consulting, L.P. All rights reserved

Sampling Methods and Tools

- Standard Operation Tools
  - Spaghetti Diagram
  - Percent Load Chart
  - Time Observation Sheet
  - Standard Work Combination Sheet
- Measles charts
- Check sheets – Point of Use and 5S
- R-Supply
- Physical count
- Clock on the wall
- Person-to-person communication
- Management Information Systems

Check Sheet Examples

Recording Check Sheet

	Days of Week						
Category	**1**	**2**	**3**	**4**	**5**	**6**	**Total**
A							
B							
C							
D							
E							
F							
Total							

Measles Chart

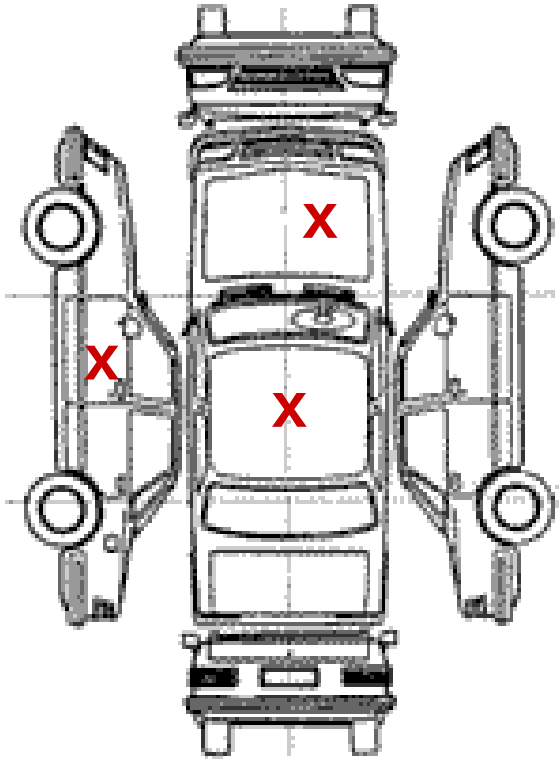

Identify surface defect locations with an "X"

Compartment Inspection Checklist

Compartment	Electrical Inspection	Mechanical Inspection	Final Acceptance
1-25-0-L			
01-35-7-Q			
3-120-0-E			
01-141-0-M			
05-200-1-E			
1-45-6-Q			

Sampling: Some Final Tips

- When you want to ensure representation from different groups or strata, prepare a separate sampling plan for each group.
- Be sure to maintain the time order of your samples – subgroups so you can see changes over time.
- Common sense is a useful tool in sampling.
- Help is available if you need it!

Used by permission, © 2007 George Group Consulting, L.P. All rights reserved

Knowledge Check: Data Types

Beside the following examples, write either "Variable" (continuous) or "Attribute" (discrete).

- Average Labor Hours
- Data input accuracy
- Responsible organization
- Hole diameter using a "go/no-go" gage
- Hole diameter
- Order turnaround time
- Weight of refrigeration charge (grams)
- Cycle Time
- Certification Defects

Knowledge Check: Measures

What is a measure?

Why do we measure?

Knowledge Check: Measurement System

What are three elements of a good measurement system?

Knowledge Check: Measurement System

Measurements show us the true performance of a process. True or False?

What analysis is performed to evaluate the Measurement System?

Walk the Gemba

Walk The Gemba

- Gemba means “real place” or “go see.”
- The work place is where value is created.
- Management has a responsibility to “get the facts” from the work space.
- More of a tactic than a special method or tool.
- Used during the **Define Phase**.
  - Helpful in defining the problem.
- Essential to **Measure** and **Analyze Phases**.
  - Vital to observing the AS-IS condition.
- Critical in the **Control Phase**.
  - Actual observation of the process environment.

Why Walk The Gemba

- Observe the “as is process”
  - Feedback on process from those doing the work
- Identification of just do its., rapid improvement events or projects
  - Bottom up input
- Green Belt training
  - Project identification
  - Identifying problems or opportunities
- Developing improvement mind set
  - Practice identifying 8 wastes

Basics – The Five Actuals

1. Go to the actual workplace.
2. Engage the people who do the actual work.
3. Observe the actual process.
4. Collect the actual data.
5. Understand the actual value stream.

Direct Observation Leads to Better Understanding.

Gemba

- "As it is written, so let it be done."
  - Written instructions do not always reflect reality.
  - "AS IS" almost never matches what is written.
- "Go to Gemba" is a tactic to characterize the process.
  - Actual observation of the process.
  - Process mapping (physical and logical)
  - Time value mapping
  - Value Stream Analysis
- "Walking" the process gives one a sense of scale and scope of the issues.

"A poor system (process) will win every time over a good employee." - Edward Deming

Walking the Process

- Pretend to be the product or data as it moves from beginning to end.
  - Be "the thing“.
- Talk to all employees involved.
- Record observations about the process.
- Do not judge or make conclusions.
- Operate in pairs.
  - One familiar with the process.
  - One not familiar with the process.
- Take your time – observe 24/7.
- Document all methods used and deviations and note:
  - What the product experiences?
  - What people are doing?
  - What the machines are doing?
  - Waste and variation?
  - Apparent constraints?

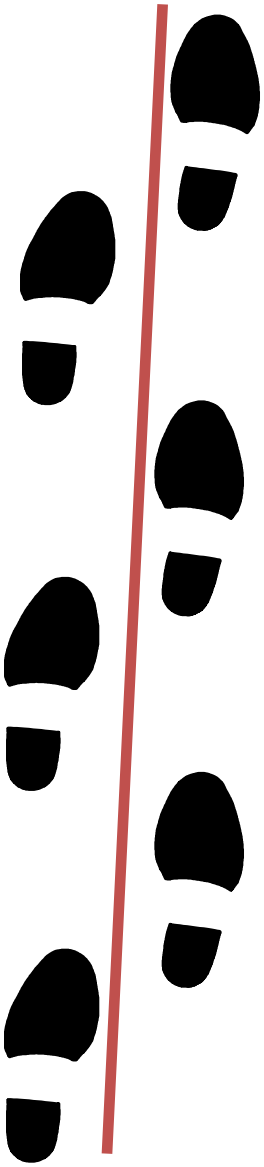

Example Questions to Ask

Sponsors and Supervisors

- *What are the keys to your success?*
- *What are your organization's goals?*
- *What is great performance for you?*
- *What measures are used?*
- *What is your organization structure?*
- *Who are your customers?*
- *What makes your product or process unique?*
- *What are some future opportunities?*
- *What are the critical issues?*
- *What problems do you foresee?*
- *How can we help you?*

More Questions to Ask

All Employees

- *How do you determine what to work on next?*
- *Where does your work come from?*
- *How do you know what to do on your task?*
- *How do you determine your priorities?*
- *Where does your work go next?*
- *What is great performance for you?*
- *What is your greatest challenge?*
- *How do you know the criticality of your task?*
- *What are your goals?*
- *What measures do you use? What is your process time? Quality? Affordability?*
- *How can we help you?*

Process Observations

- List the process steps observed, including:
  - All inputs and outputs
  - Moves and formats
  - Inspections, reviews, sign-offs
  - Rework loops
  - Holding areas
  - Priority management
  - Set-up activities
  - Other observations
- Build graphic process maps (logical and physical).
- As part of understanding, review with users and adjust as necessary.

Process Observation Form

Process Observation Form

Process Observed: _____ Date: _____

Observer:

Step	Description	Distance from Last Step	Task Time	Queue (Wait) Time	Touch Time	Notes
	Totals					

EXAMPLE

Process Observation Form (cont.)

- **Process Description** - An action that starts with a verb in order to describe the process.
- **Distance From Last Step** - The distance from the last step to the next process location.
- **Task (Touch) Time** - The actual time it takes to perform the operation.
- **Queue (Wait) Time** - The amount of time the product is waiting to be worked (e.g., “the product is sleeping”).

Time Observation Sheet

- Documents the component tasks, sequence, and process times for one cycle.

- Total operating time (Cycle Time) = The time it takes a product to move (cycle) through a *step* or a *process*, including queue and move times.

Time Observation Sheet Example

Process Observed	*Writing on Flipchart*
Product/Service	*CP-550-0382*

TIME OBSERVATION FORM

Page 1 of 1

Observation Date/Time	*March 14, 20YY/9:00:00 AM*
Observer(s)	*Hank Ford*

No.	Component Task		Observed Cycles: 1	2	3	4	5	6	7	8	9	10	D Lowest Repeatable Component Task Time	Machine Cycle Time	Points Observed
1	*Get up from chair*	Cumulative	0:03	0:31	0:59	1:32	1:57	2:25	3:01	3:26			2		
		Task Time	3	2	2	2	2	3	2	2					
2	*Walk to flipchart* A	Cumulative	0:09	0:38	1:04	1:37	2:03	2:31	3:06	3:32			5		
		Task Time	6	7	5	5	6	6	5	6					
3	*Pick up marker*	Cumulative	0:11	0:43	1:07	1:39	2:06	2:34	3:08	3:34			2		*(cycle #2) dropped marker*
		Task Time	2	5	3	2	3	3	2	2					
4	*Write on flipchart*	Cumulative	0:18	0:49	1:20	1:46	2:12	2:41	3:14	3:41			7 D*		*(3) made mistake, had to rewrite*
		Task Time	7	6	13	7	6	7	6	7					
5	*Put down marker*	Cumulative	0:21	0:51	1:23	1:48	2:15	2:44	3:16	3:44			2		
		Task Time	3	2	3	2	3	3	2	3					
6	*Walk back to chair*	Cumulative	0:27	0:54	1:28	1:53	2:20	2:56	3:21	3:50			5		*(2) sprinted back to chair, (6) stop and talked to team member*
		Task Time	6	3	5	5	5	12	5	6					
7	*Sit down in chair*	Cumulative	0:29	0:57	1:30	1:55	2:22	2:59	3:24	3:52			2		
		Task Time	2	3	2	2	2	3	3	2					
		Cumulative													
		Task Time													
		Cumulative													
		Task Time													
		Cumulative													
		Task Time													
		Cumulative													
		Task Time													
	TIME FOR 1 CYCLE	B	29	28	33	25	27	37	25	28			25	< Lowest Repeatable Cycle Time	

C

(C) Mark R. Hamel. All rights reserved

Time Observation Sheet Example (cont.)

A. **Task Time**: Time for each component task in a give cycle, in seconds (and minutes).

B. **Time for one cycle**: Time for one completed observed cycle, in seconds (and minutes).

C. **Lowest repeatable cycle time**: Select the lowest, non-abnormal cycle time observed across all cycles observed.

D. **Lowest repeatable cycle time**: Select the lowest, non-abnormal task time observed across all cycles and record in the appropriate cell.

Major items to note:

- Always write the numbers from the stopwatch in the top half of the box!
- Write the calculated process time in the bottom half.
- The sum of the lowest repeatable component task times should match the lowest repeatable cycle time.

What Is a Process Map?

- A graphical representation of a Process Flow identifying the steps of the process – the X's (inputs) and Y's (outputs) of the process and opportunities for improvement.
- Process Maps need to be modified to fit the particular needs of any specific process.
- Types of Process Maps:
  - Linear
  - Top-down
  - Functional (swim lanes)
  - Spaghetti
  - Circle

Used by permission, © 2007 George Group Consulting, L.P. All rights reserved

Why Map the Process?

- Find issues which require extra processing, rework, or cause downstream errors.
- Uncover actions performed at the wrong time, or completely non-value added items.
- Discover processing steps which really aren't needed.
- Show where employees, information or goods move from one place or another without any purpose.
- Identify upstream activity that causes downstream waiting.
- Show steps that ultimately don't meet the need of customer.

Process Maps

- Used for visualizing a system or process (sequence of events, tasks, activities, steps).
  - Can be used to identify opportunities for improvement such as streamlining or combining operations.
- Drawn with standard symbols representing different types of activities or operations.

Process Maps

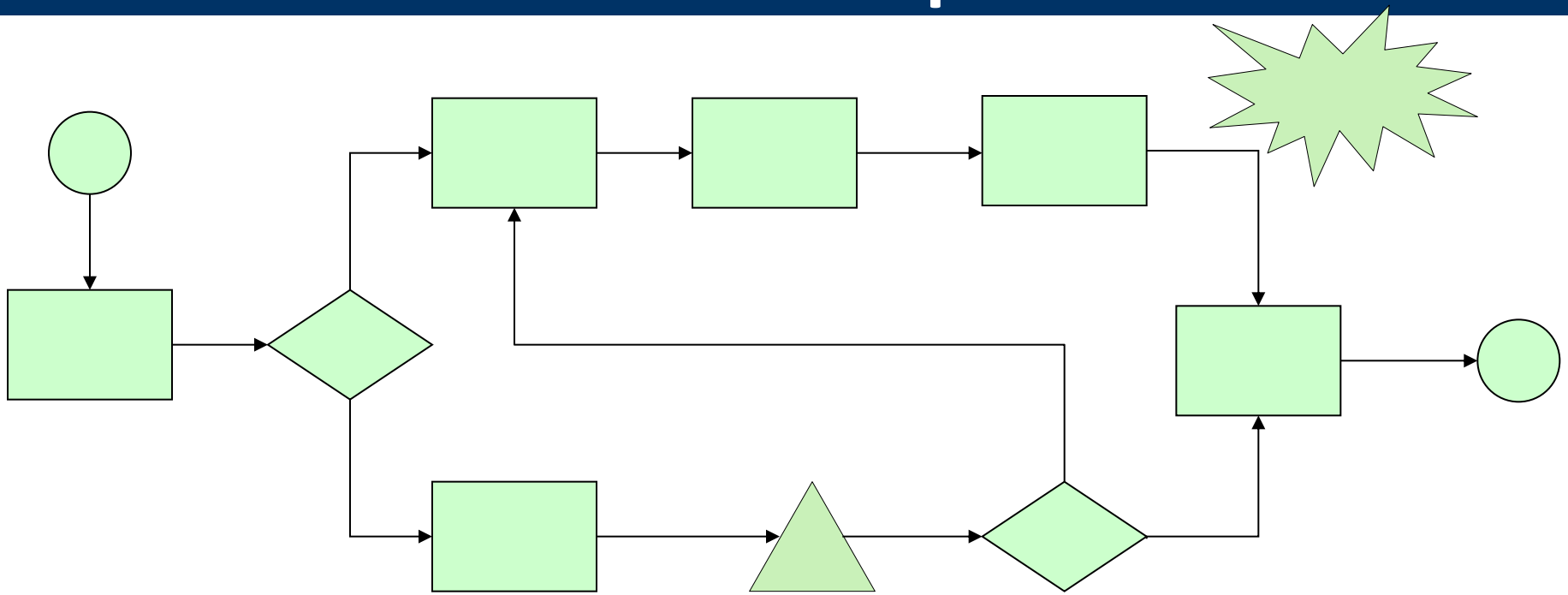

Standard Process Map Symbols:

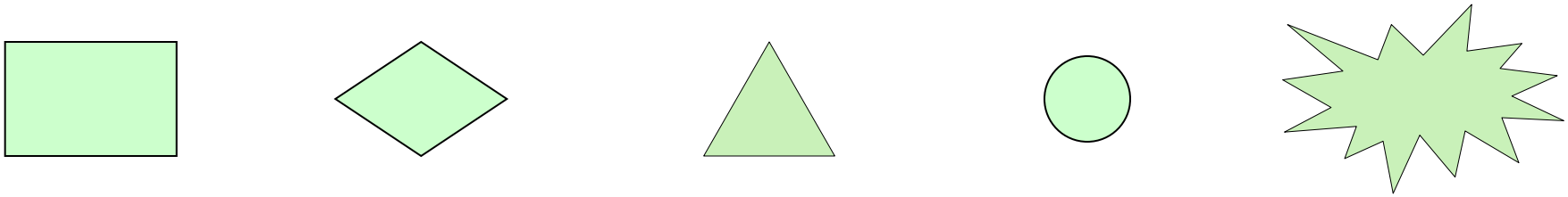

Process Step | Decision Point | Wait (Inventory) | Start/Stop Redirect | Project Burst

Linear Process Map - Example

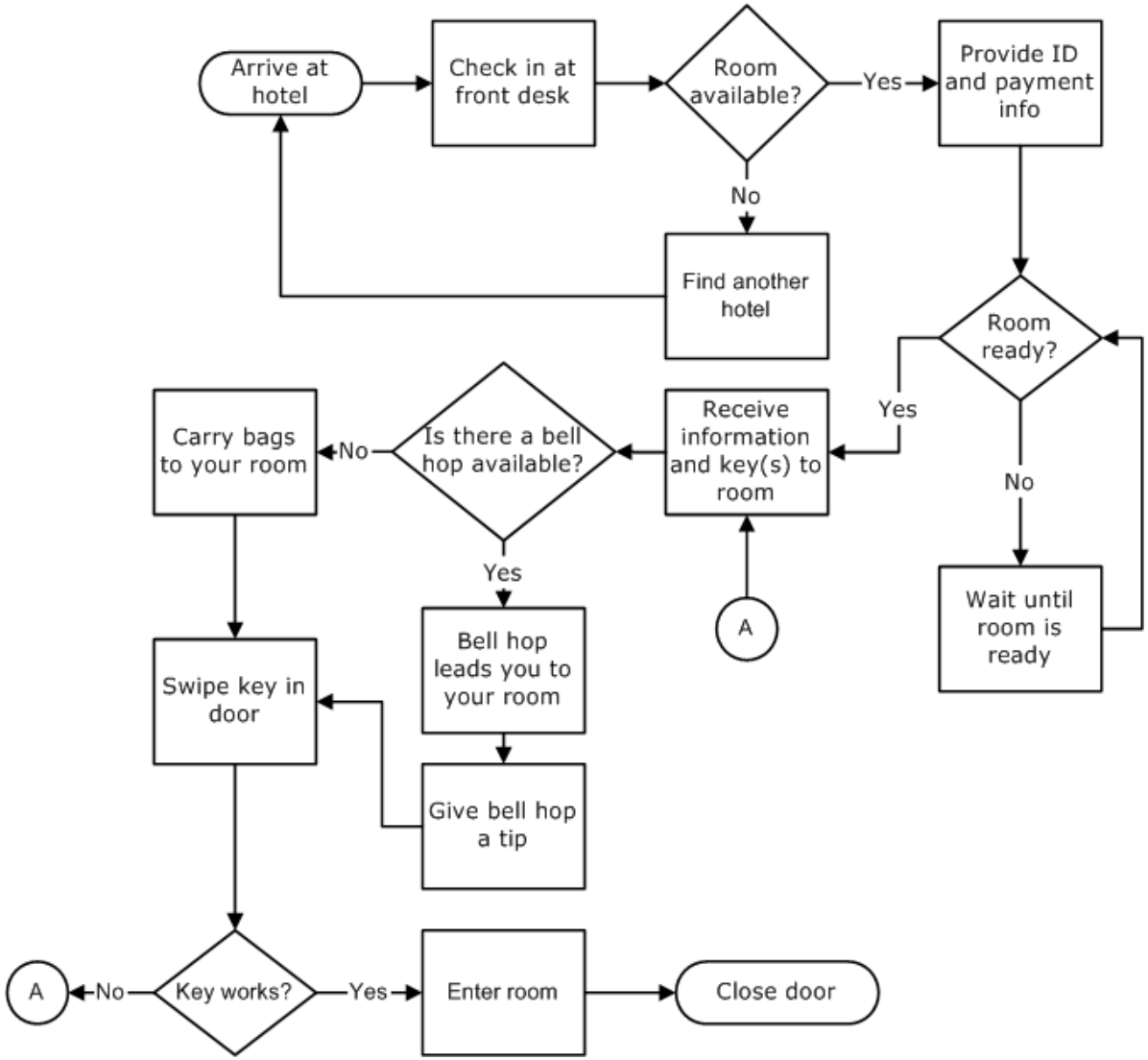

- Layout of process flow should be uncluttered.
- May need more than one slide for presentations to make legible.
- Minimal overlap of connectors.

Top Down Flow Chart

Purpose: To determine the correct level of the process to Value Stream Map – it is a vertical look at the process.

Meant to provide FOCUS by selectively expanding from the highest level down to the level where the root cause is located.

- Determine the Start and Finish points of the process.
- Define 5 to 9 high level activities between the Start and Finish.
- Expand the SINGLE high level activity most likely to contain the root cause into 5 to 9 medium level activities.
- Expand again (and again!) until the level of the cause(s) of the problem is reached.
  - It is critical to our business to focus our improvement resources on the areas that are going to have the greatest return.

Used by permission, © 2007 George Group Consulting, L.P. All rights reserved

Top-Down Map – Example

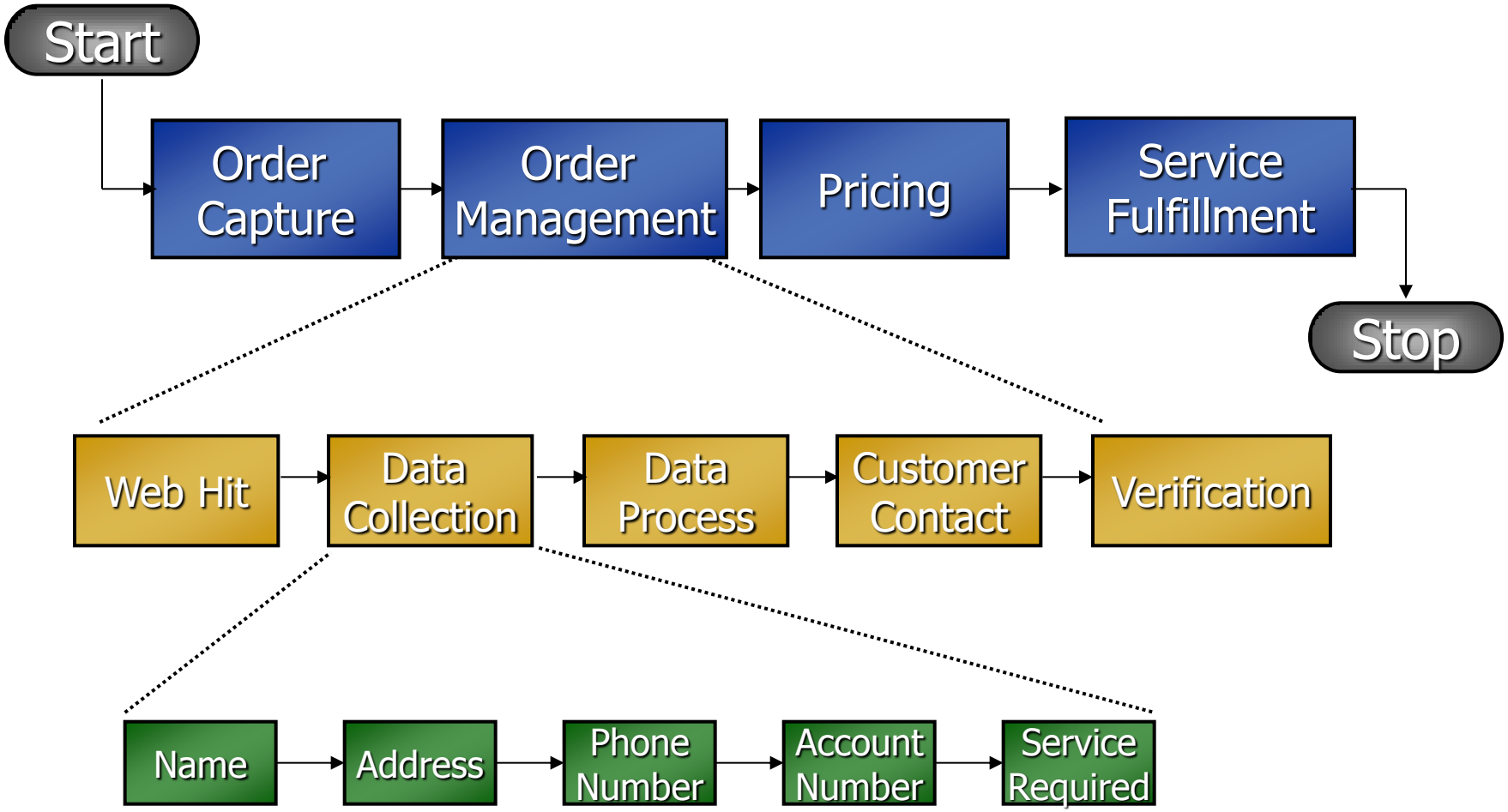

Used by permission, © 2007 George Group Consulting, L.P. All rights reserved

Functional (Swim Lanes) - Example

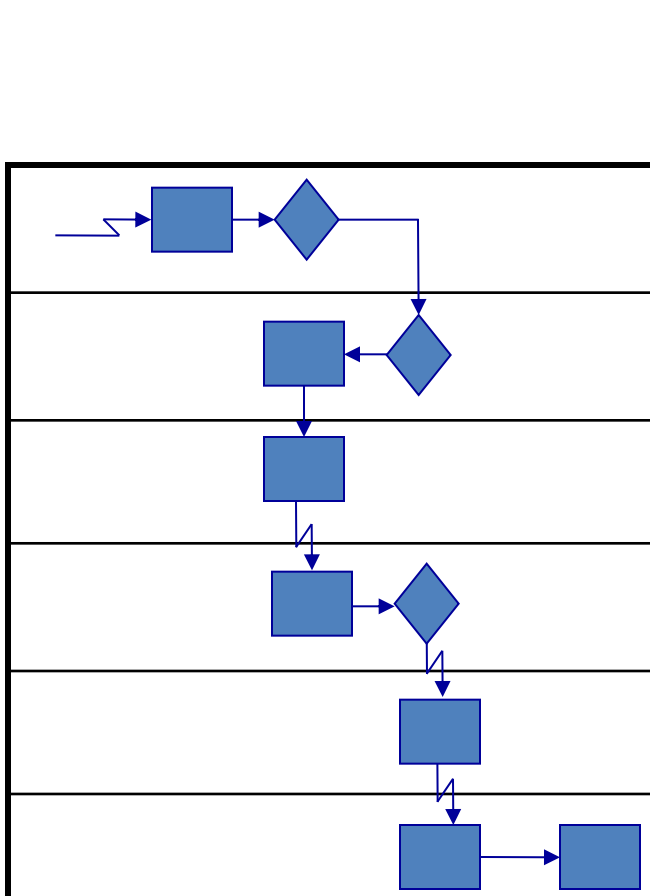

	Process Time	Inspect	Move (feet)	Queue (days)	WIP (pieces)
Function A	2 min.	35 min.	15 ft.		10
Function B	15 min.	20 min.	35 ft.		15
Function C	10 min.		40 ft.	2	23
Function D	5 min.	30 min.	30 ft.	4	20
Function E	40 min.		60 ft.	5	10
Function F	15 min.			4	24
Totals	**87 min.**	**85 min.**	**180 ft.**	**15**	**102**

Ref: *Memory Jogger II*, Page 56

Spaghetti Diagram

- Graphically describes the production layout, standard in-process inventory, and other factors in standard operations.
- Used to depict where there is wasted product, travel, people movement, queues, etc.
- Shows the physical area layout, flow of product through a series of process steps, or maps where a person walks to complete their process.

Before/After Spaghetti Diagram

BEFORE

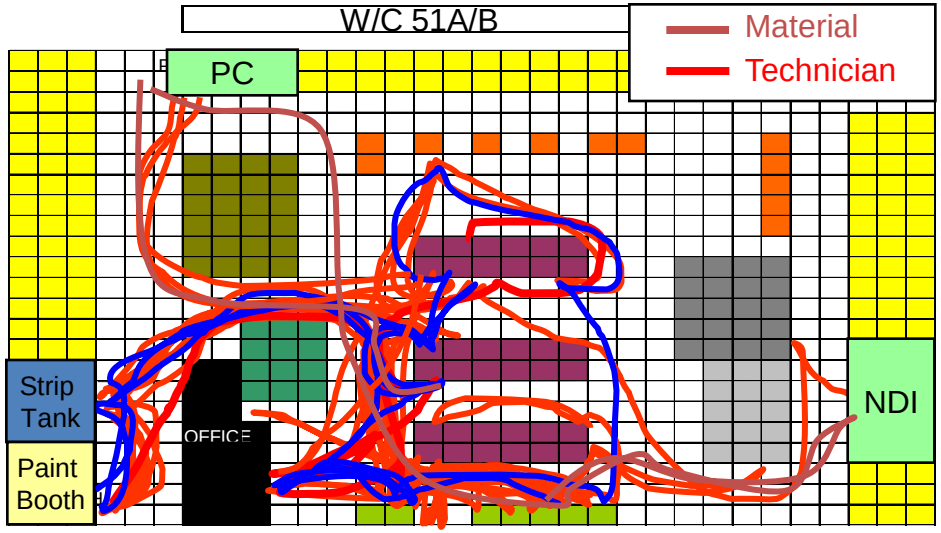

AFTER

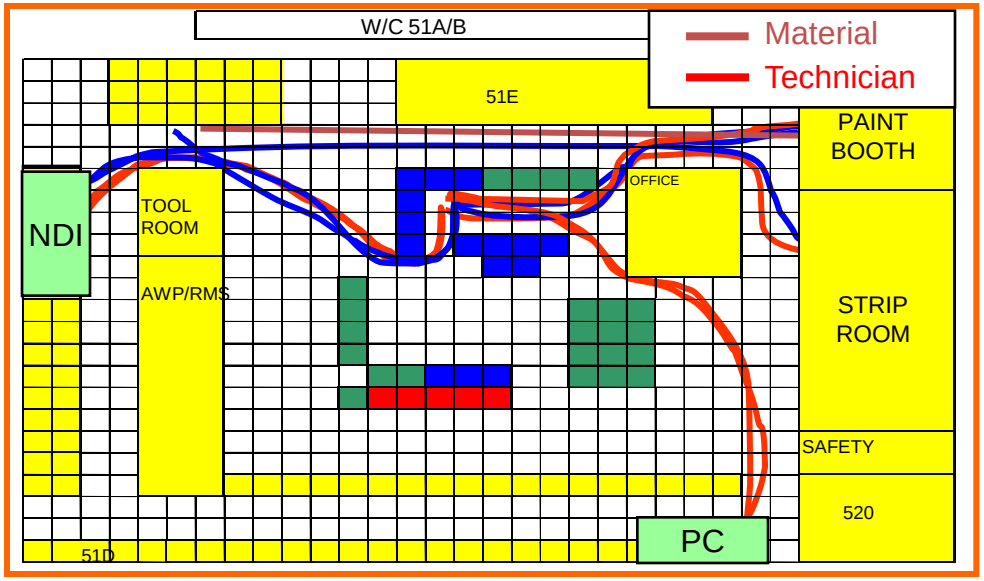

Circle Diagram (Information Flow, Handoffs)

Current State

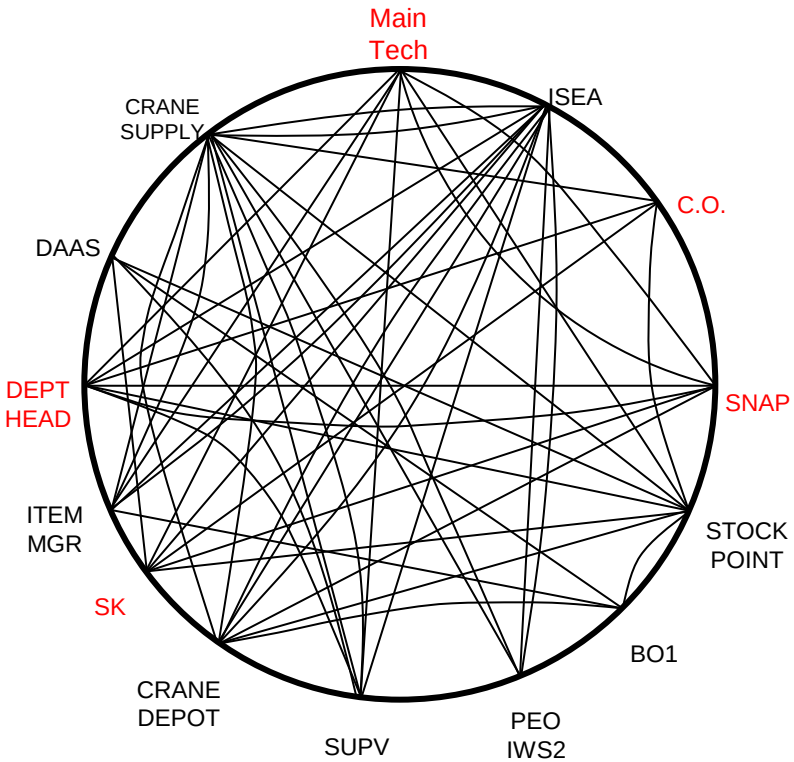

Handoffs … 47
Flow Clock Time … 486 hrs
Manual Touch Time … 108 hrs

Step 1: Place transactional elements / resources around the circle.

Step 2: Map a typical transaction. It is a good idea to number each line (step in the process). Label parallel activity as 1a, 1b, etc.
Flow and Touch time is derived from the Value Stream Map.

Step 3: Rework (churning) can be reflected with red lines.

Circle Diagram (Information Flow, Handoffs)

Current State

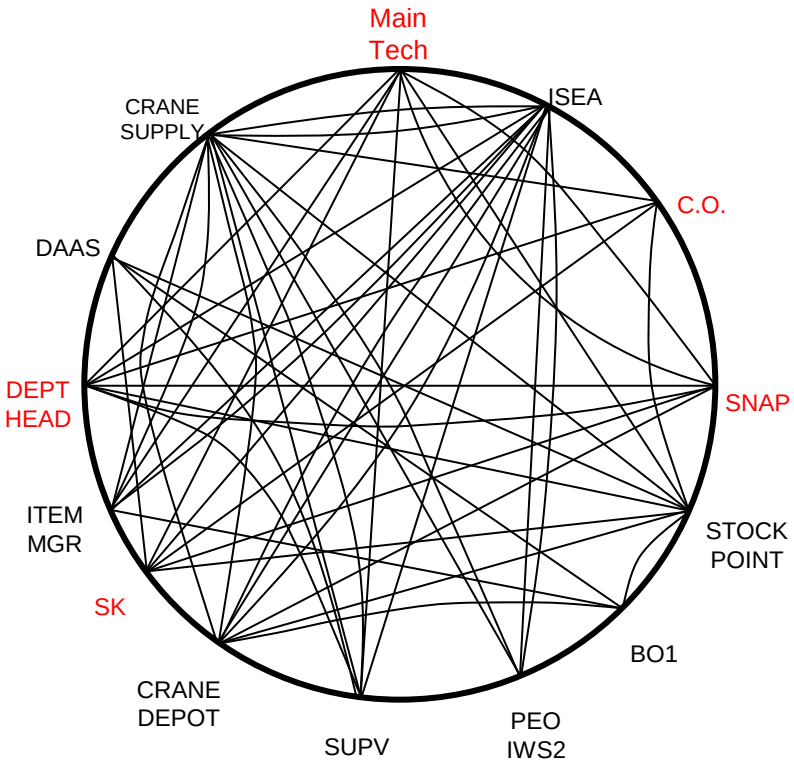

Handoffs … 47
Flow Clock Time … 486 hrs
Manual Touch Time … 108 hrs

Future State

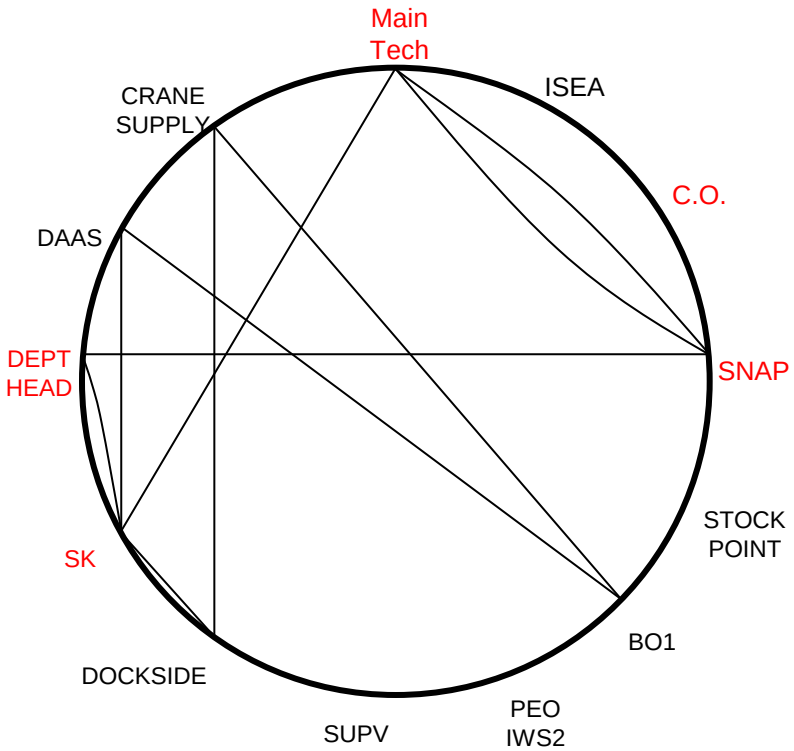

Handoffs … 10
Flow Clock Time … 90 hrs
Manual Touch Time … 58 hrs

Knowledge Check: Gemba

Why is it critical to walk the process (go to Gemba)?

Knowledge Check: Process Maps

Name three types of process maps?

Knowledge Check: Process Maps

What kind of map would we use if we were concerned with process layout?

What kind of map visually shows how work flows from function to function?

Value Stream Mapping

What is Value Stream Mapping (VSM)?

- A visual tool to help see and understand the flow of material and information.
- A big picture perspective that focuses on improving the whole but not optimizing pieces of the process.
- A tool that requires physically observing the process area in question.

"Nature does constant value stream mapping – it's called evolution." – Carrie Latet

VSM 12-Step Process

1. SIPOC
2. BOUNDARIES
3. VOICE OF THE CUSTOMER
4. GATHER APPROPRIATE INFORMATION

See the Process…

5. WALK THE PROCESS
6. CREATE CURRENT STATE MAP
7. SPAGHETTI MAP / CIRCLE DIAGRAM
8. VALUE ANALYSIS

See the Waste…

9. CREATE IDEAL STATE MAP

Visualize the Perfect State…

10. DEVELOP FUTURE STATE MAPS
11. DEVELOP ACTION PLAN
12. IMPLEMENT THE PLAN

Lead the way toward it…

Why Map the Current State?

A current state map is a pictorial view showing how material and information currently flow.

- To show process simply and visually.
- To clarify an organization's understanding of how the current process actually operates.
- To create a baseline for future improvements to be made and measured.

Mapping Tips

- Use Post-it® notes on butcher paper.
- Place top of process boxes just below the middle of the page.
- Leave enough room between process boxes to show inventory.
- Decide whether to count all parts or just a sample part – make the assumptions up front.
- Title and date map.

Current State Mapping Process Steps

1. Gather information on the customer.
2. Walk the process - sketch process boxes.
3. Fill in data boxes and inventory levels.
4. Document how goods are delivered to the customer.
5. Gather information on suppliers.
6. Add information flows.
7. Sketch how material moves between processes.
8. Draw production lead time / value-added timeline.

Current State VSM

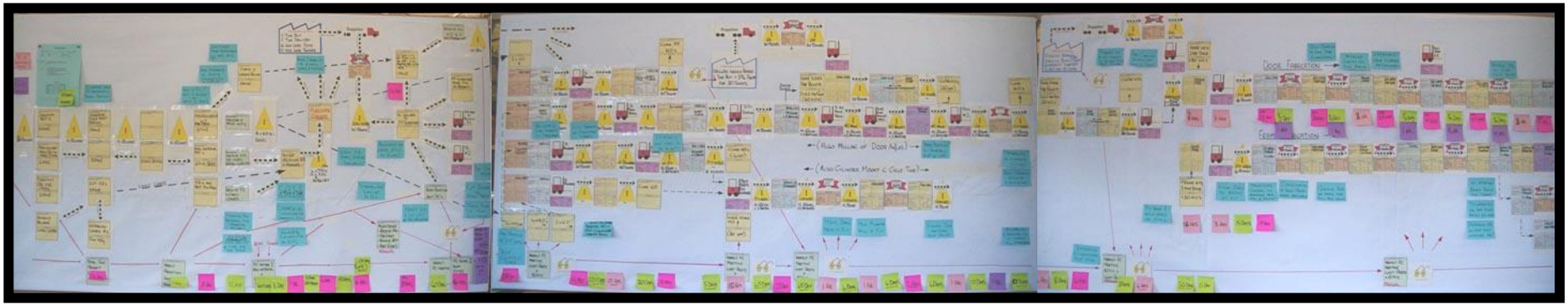

Current State Map Buildup

- Walk the Process, noting process steps, decision points and inventory (wait points)
- Keep track of forms/documents used, and obvious improvement areas with project bursts
- Use Post-it® to allow for steps to be moved easily

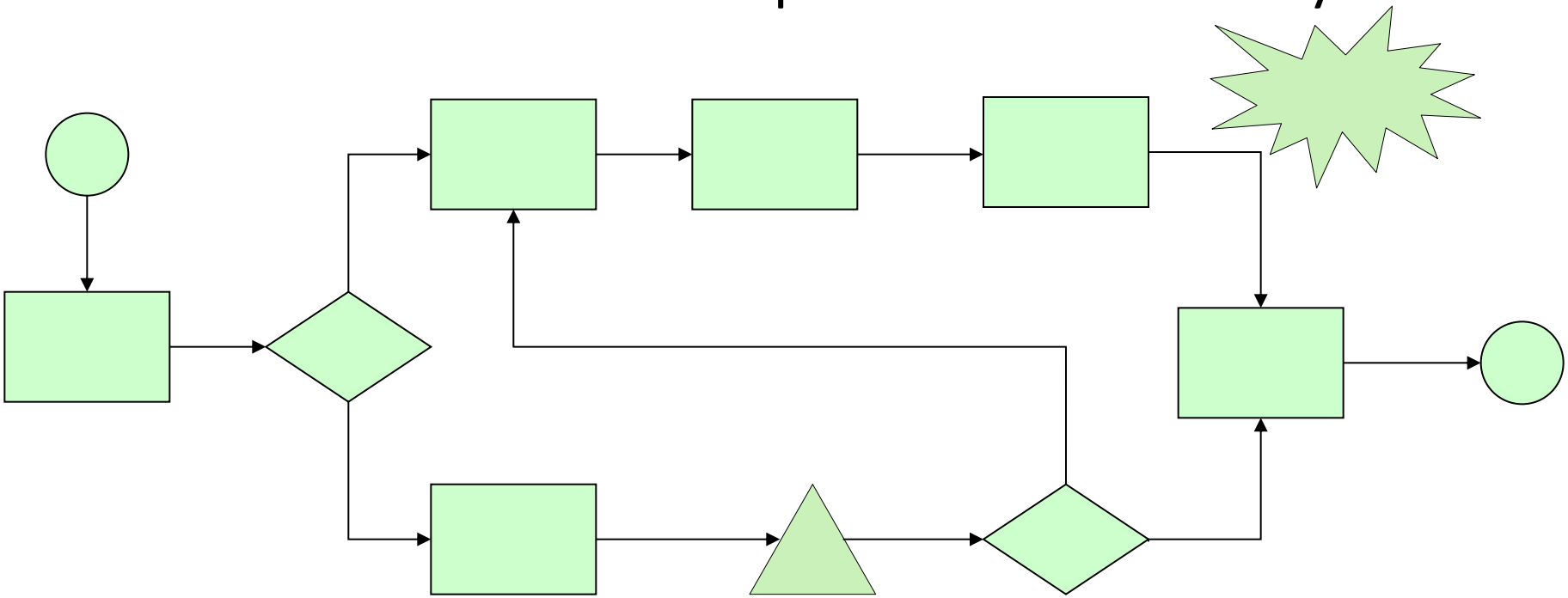

Exercise: Current State Map

Break into Simulation groups and create a Current State Map for your Statapult process.

60 minutes

Value

- **Value Added (VA)**
  - Activities the customer wants it (and is willing to pay for it) and,
  - Activities that change form, fit, or function of a product or service and,
  - Activities done right the first time.
- **Non-Value Added (NVA)**
  - Activities that do not change form, fit, or function.
  - Activities that fall under any of the eight forms of waste.
  - Activities not performed right the first time.
- **Business Value (BV)**
  - Activities causing no value to be created but which cannot be eliminated based on current technology or requirements.

Value Analysis

The objective is to:

- Eliminate the hidden costs that do not add value to the customer.
- Reduce unnecessary process complexity, and thus errors.
- Reduce the process cycle time.
- Increase capacity by better utilizing resources.

"It's only the last turn of a bolt that tightens it – the rest is just movement." - Shigeo Shingo

Used by permission, © 2007 George Group Consulting, L.P. All rights reserved

Value Added and Non-Value Added Activity

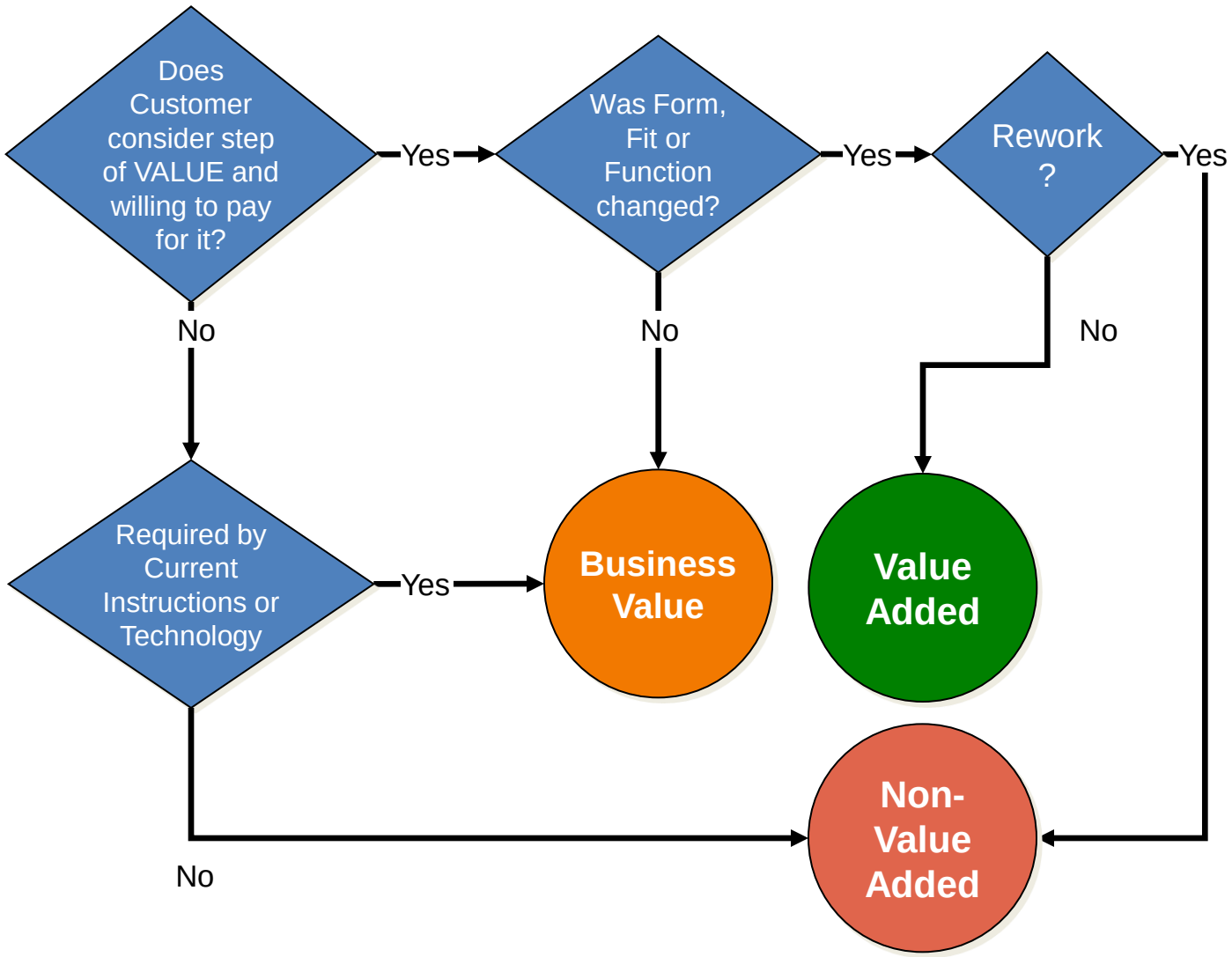

T – Transportation

I – Inventory

M – Motion

W – Waiting

O – Over-production

O – Over-processing

D – Defects

U – Under-utilization of people

Examples of Non-Value Added Activities

Work Center

- Long set-up time
- Incapable process
- Poor work methods
- Lack of training
- Lack of organization
- Layout
- Irrelevant performance measures

Office / Administration Areas

- Redundant systems
- Incomplete information
- Functional handoffs
- Batch processing
- Unnecessary data
- Transportation
- Approvals

- NVA activities account for 50%-90% of product cost.
- People are not NVA, tasks are.
- NVA does not mean unimportant.

VA vs. NVA is a Filter

- Used to focus efforts in the right places.
- Don’t take it personally!
- VA depends on correct identification of the customer and the value stream objective.

Map Legend

Value Added

Non-value Added

Business Value*

* Be stingy with “Business Value” designations! Require chapter and verse proof that a step is required by law, by contract, etc.

Current State VA / NVA

- **NVA= Red**
- **BV = Yellow or Orange**
- **VA = Green**

- Visually identify areas for improvement opportunities.
- Accomplished by color coding each step.

Exercise: Value Analysis

Break into Simulation groups and conduct a Value Analysis for your Statapult Current State Map.

45 minutes

Using the Value Stream Mapping Tools

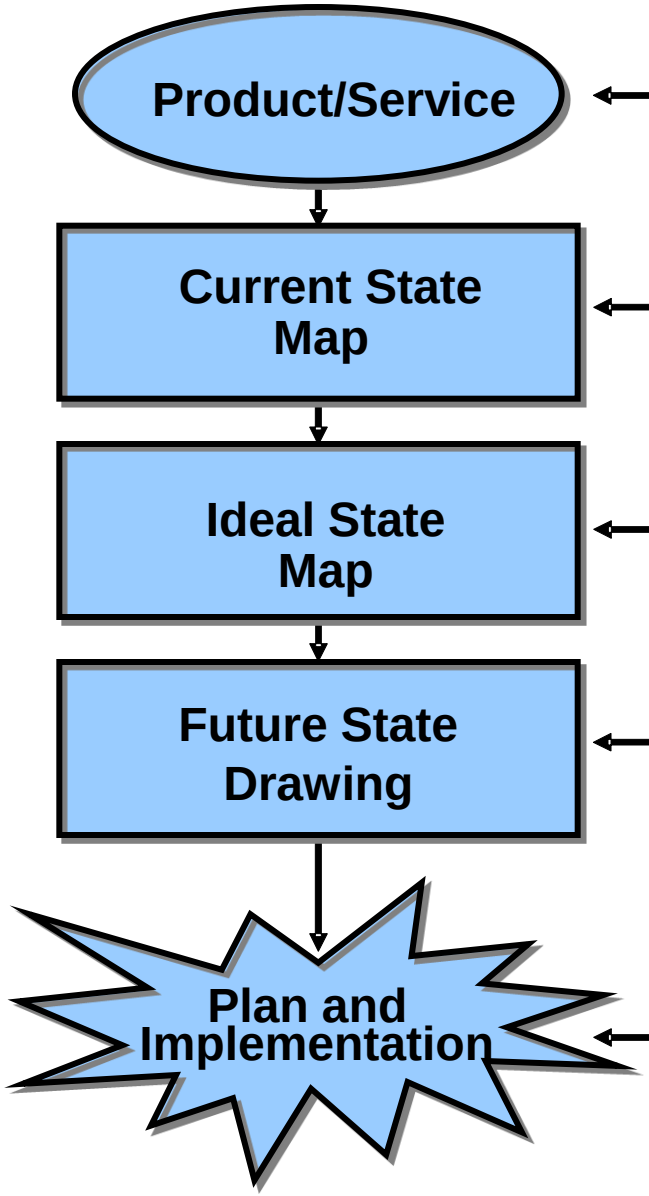

Determine the practical limits of your mapping activity.

Understanding how things currently operate.

How would things operate in a perfect world?

Design a lean flow.

The goal of mapping!

Create an Ideal State VSM

- Start with a clean sheet.
- Picture your value stream with no waste.
- Create flowchart using only the VA steps.
- No stops, piles, backups, wait time, parallel paths… (*assume that anything is possible*).

"If you always do what you've always done, you'll always get what you've always got." - Henry Ford

What is a Future State Map?

- Visual of improved material and information flow.
- Unites CPI concepts and techniques.
- Used to drive detailed implementation plans.
- What type of improvements are needed and why?

Examples of Improvement Targets

- Reducing cycle time
- Reducing inventory
- Cost reduction
- Increasing available capacity
- Decreasing the area footprint
- Reducing order lead time

Future State Map Flow Layout Tools

- Future State Spaghetti Diagrams
- Future State Circle Diagrams
- Future State Physical Layout

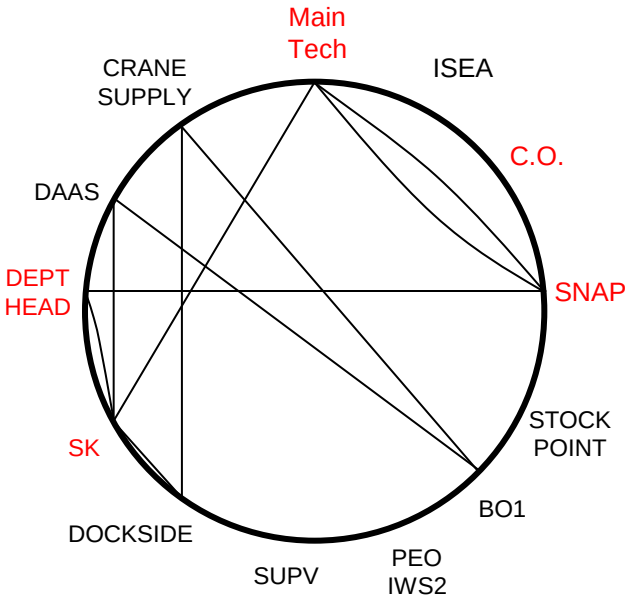

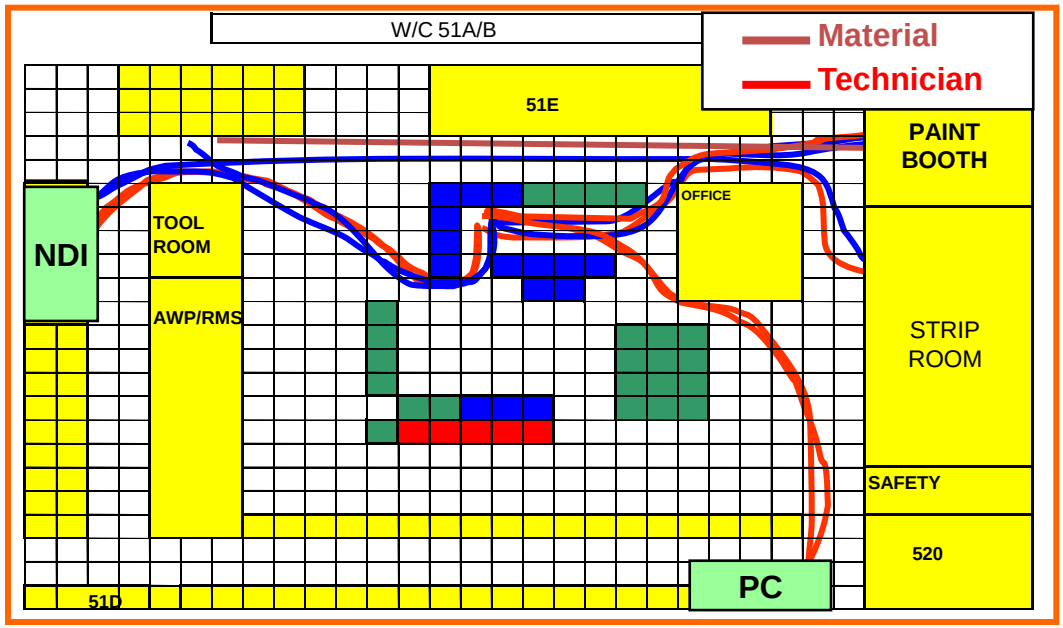

REVIEW: 12-Step Process

1. SIPOC
2. BOUNDARIES
3. VOICE OF THE CUSTOMER
4. GATHER APPROPRIATE INFORMATION

See the Process…

5. WALK THE PROCESS
6. CREATE CURRENT STATE MAP
7. SPAGHETTI MAP / CIRCLE DIAGRAM
8. VALUE ANALYSIS

See the Waste…

9. CREATE IDEAL STATE MAP

Visualize the Perfect State…

10. DEVELOP FUTURE STATE MAPS
11. DEVELOP ACTION PLAN
12. IMPLEMENT THE PLAN

Lead the Way toward it…

VSA Materials

- Butcher Block paper
- Multiple colors of large and small “Post-It” notes
- Markers
- Tape
- Computer projector and sound equipment
- Conference room with large wall area for hanging maps

Knowledge Check: Value Stream Map

How are a process map and a value stream map different?

Knowledge Check: Value

What are the criteria to determine that an activity is value adding?

Knowledge Check: Value Analysis

What are the three categories of activity we use during Value Analysis?

Knowledge Check: Value Stream Map

We should always try to draw our value stream maps using computer software first when possible to save time.

True or False?

What We Have Covered: Measure Phase

Measure Phase Tools

- Data Types (Attribute and Variable).
- Data Collection Plan.
- Walk the Gemba.
- Value Stream Maps development.
- Value Added, Business Value and Non-Value Added definitions.